IEEE ETFA 2022 – Workshop 10

“Enabling robust, converged networks for Industry 4.0”

2 hours of presentations and 2 hours of live measurements and demonstrations on topics such as OPC UA PubSub, Single Pair Ethernet, Time-Sensitive networking, redundancy, EMI/EMC, measurement methods …
The last version of the presentations can be found on https://www.cini40.eu/downloadetfa2022 or using the QR code underneath.

Come and see voltage signals and currents on Ethernet and Single Pair Ethernet, effects of coupling of EMI with a clamp on a brownfield PA cable for 10BASE-T1L SPE, TSN implementations and accurate measuring tools for pre-empted frames, decoupling & decoding of 100BASE-T1 SPE with Rohde&Schwarz and Tektronix tools and oscilloscopes, OPC UA PubSub implementations, and much more!

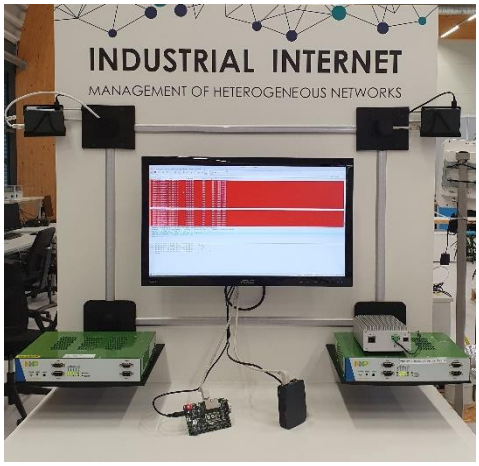

OPC UA PubSub and TSN

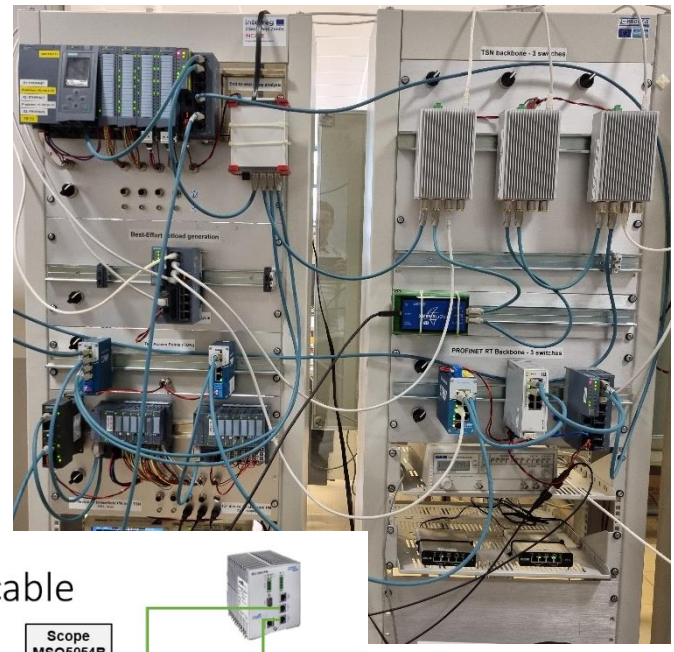

TSN and brownfield PROFINET

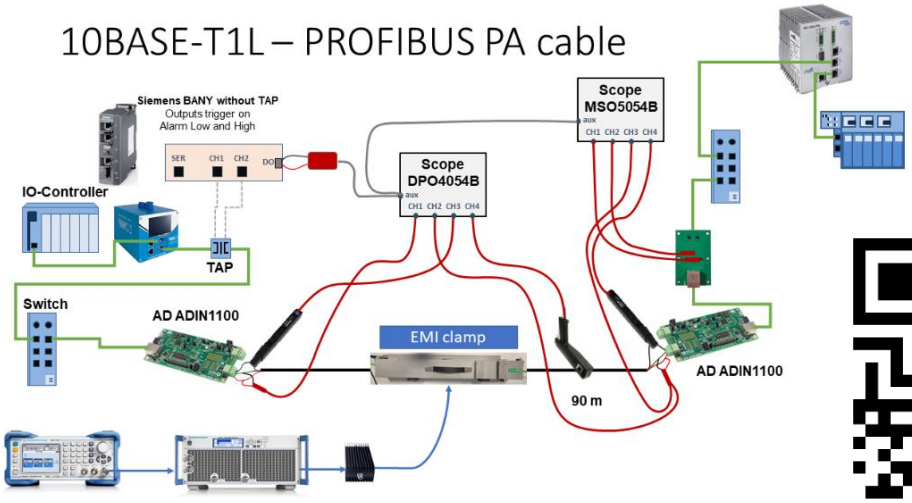

IEEE ETFA 2022 – Workshop 10

“Enabling robust, converged networks for Industry 4.0”

Come and see voltage signals and currents on Ethernet and Single Pair Ethernet, effects of coupling of EMI with a clamp on a brownfield PA cable for 10BASE-T1L SPE, TSN implementations and accurate measuring tools for pre-empted frames, decoupling & decoding of 100BASE-T1 SPE with Rohde&Schwarz and Tektronix tools and oscilloscopes, OPC UA PubSub implementations, and much more!

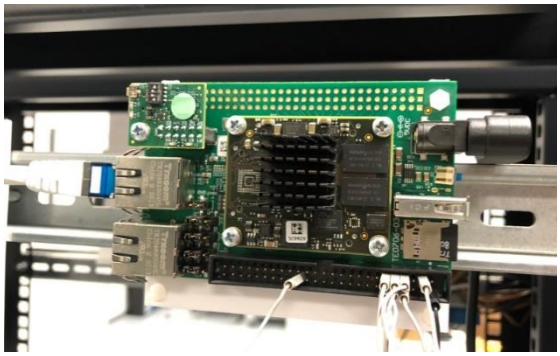

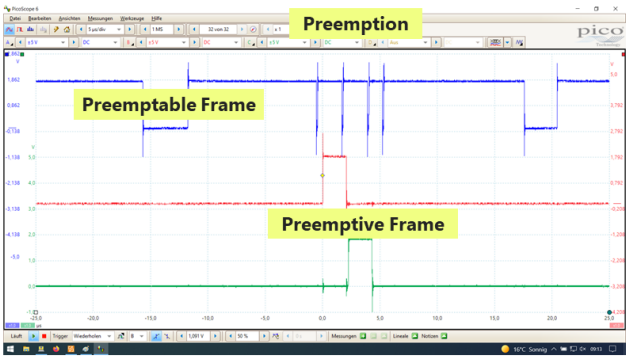

TSN monitor and detection of preemptable frames

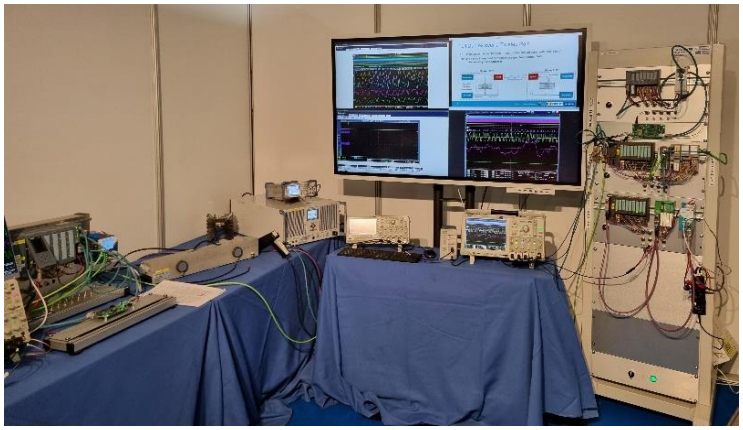

Set-up for for 100BASE-TX, 10BASE-T1L and RS485 EMI testing

The last version of the presentations can be found on https://www.cini40.eu/downloadetfa2022 or using the QR code.