Single Pair Ethernet

IEEE ETFA 2022 – WS10
"Enabling robust, converged networks for Industry 4.0"
06/09/2022 – Stuttgart (Germany)

Most recent version of the presentation

Arne Verhoeven
Dimitri De Schuyter
Mathieu Troch
Philippe Saey (lecturer)

Outline

- Introduction
  - What is Single Pair Ethernet?
  - Advantages of Single Pair Ethernet
  - Single Pair Ethernet Standards
- SPE: full duplex over one single twisted wire pair – How?
- Ethernet frame – Signal encoding
- Power over Data Line (PoDL)
- Cabling and Connectors
- Ethernet Advanced Physical Layer (APL)
- Conclusion

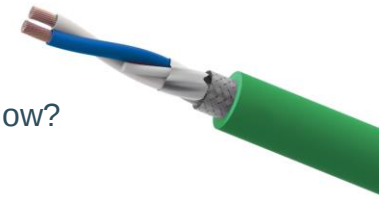

What is Single Pair Ethernet?

From 2 pair 100 Mbps
(e.g. PROFINET)

To 4 pair 1000 Mbps
(1 Gbps, difficult confection)

To 1 pair 10 – 100 - 1000 Mbps

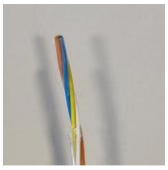

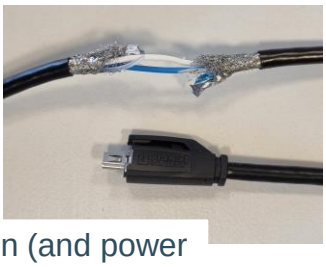

Single Pair Ethernet (SPE) provides full duplex transmission (and power delivery) over a single balanced twisted wire pair

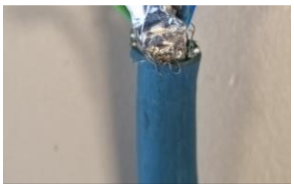

What is Single Pair Ethernet?

- SPE affects only the physical layer
  - Just like optical fiber, WiFi…
- Layers 2-7 remain unchanged

802.3 Standard Ethernet

Application	• End User layer • HTTP, FTP, IRC, SSH, DNS
Presentation	• Syntax layer • SSL, SSH, IMAP, FTP, MPEG, JPEG
Session	• Synch & send to port • API's, Sockets, WinSock
Transport	• End-to-end connections • TCP, UDP
Network	• Packets • IP, ICMP, IPSec, IGMP
Data Link	• Frames • Ethernet, PPP, Switch, Bridge
Physical	• Physical structure • Coax, Fiber, Wireless, Hubs, Repeaters

SPE Specific

Advantages of Single Pair Ethernet

- Smaller connector + reduced footprint
- Lighter, more compact, cheaper and simpler cabling
- Simpler field assembly of connectors (1)
- Power + data over 1 wire pair
- Full duplex communication over 1 wire pair
- High bandwidth – up to 1000 Mbps (40 m)
- Low bandwidth (10 Mbps) over 1000 m
  - With optional intrinsic safety
  - With optional re-use of existing fieldbus cabling

→ **Implemented in different standards!**

SPE (10BASE-T1L) PCB

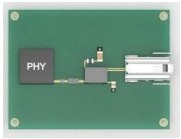

RJ45 PCB

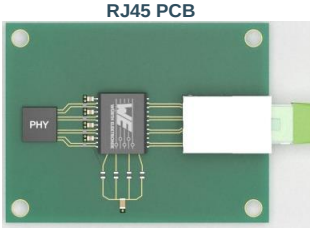

(1) About 6-8% of 1 Gbps Ethernet connectors assembled in the field are not working or are of bad quality.

What is Single Pair Ethernet?

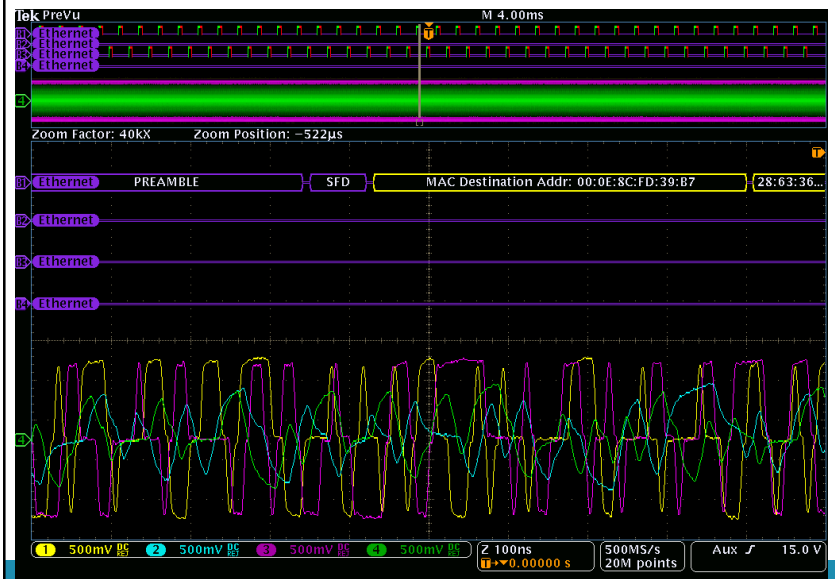

Full duplex:

- TX/RX possible at the same time
- **Your PROFINET cable has 4 wires, 2 wire pairs: TX and RX are nicely separated!**
- Measurement on 65 m PN cable, voltage signals on TX and RX at switch and IO-Device sides:
  - **Always signals on both wire pairs!** (Unlike e.g. RS232c or RS485)
  - Attenuation of the voltage levels: at one end, and only 65 m
- Refer to "The Ethernet physical layer revisited"

What is Single Pair Ethernet?

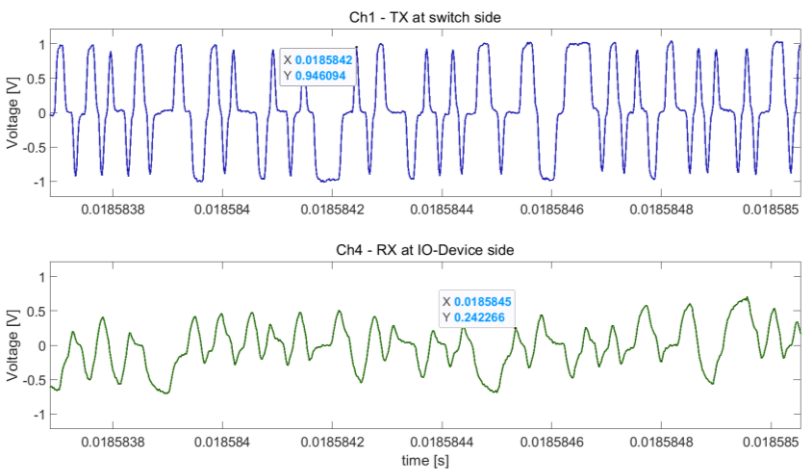

Full duplex:

- TX/RX possible at the same time
- **Your PROFINET cable** has 4 wires, 2 wire pairs: TX and RX are nicely separated!
- Measurement on 65 m PN cable, voltage signals at switch and IO-Device sides:
  - Always signals on both wire pairs! (Unlike e.g. RS232c or RS485)
  - **Attenuation of the voltage levels: at one end, and only 65 m**

What is Single Pair Ethernet?

- Single Pair Ethernet (SPE) provides full duplex transmission (and power delivery) over a single balanced twisted wire pair
- **Interpretation - Challenges**:
  - Balanced
  - Twisted
  - **Full duplex**
  - **Over *one* wire pair?**
    - **Signals**
    - **Power**

Over one wire pair ???

- **Superposition of signals** as these are always present
- Large one from the "near end" superimposes on the small one coming from the "far end"
- Some types of SPE cable are a 1000 m long … up to 60 dB less signal (depending on the frequency)
- We see on both sides reflections ("echo") because of small changes in characteristic impedance along the way (passive connections, different cable types, ageing and wear, …)
- We pick up disturbances along the way
- And … PoE requires 4 wires …

SPE Standards in short

- **10BASE-T1S**
  - Half duplex, point-to-point or multidrop, 25 m
- **10BASE-T1L**
  - Full duplex, 1000 m, power, intrinsic safety
- **100BASE-T1**
  - Full duplex, power, 40 m
- **1000BASE-T1**
  - Full duplex, power, 40 m

Automotive

Industrial

SPE Standards - Properties

	10BASE-T1S	10BASE-T1L	100BASE-T1	1000BASE-T1
Standard	802.3cg-2019	802.3cg-2019	ISO/IEC/IEEE 8802-3:2017/Amd 1-2017	ISO/IEC/IEEE 8802-3:2017/Amd 4-2017
Duplex type	Half duplex	Full duplex	Full duplex	Full duplex
Max. unshielded cable length (m)	15 (point-to-point) 25 (multidrop)	/	15	15
Max. shielded cable length (m)	15 (point-to-point) 25 (multidrop)	1000	40	40
Max peak-to-peak voltage level of transceiver (V)	1	1, 2.4	2.2	1.3
PoDL	Point-to-point: Yes Multidrop: in progress	Yes	Yes	Yes
Extra features	Multidrop	Ethernet-APL with intrinsic safety for process industry		

Outline

- Introduction
  - What is Single Pair Ethernet?
  - Advantages of Single Pair Ethernet
  - Single Pair Ethernet Standards
- **SPE: full duplex over one single twisted wire pair – How?**
- Ethernet frame – Signal encoding
- Power over Data Line (PoDL)
- Cabling and Connectors
- Ethernet Advanced Physical Layer (APL)
- Conclusion

SPE: full duplex over one single twisted wire pair

- SPE affects only the physical layer
  - Just like optical fiber, WiFi…
- Layers 2-7 remain unchanged

- PHY interfaces with data link "MAC" layer using the standardized Media Independent Interface (MII) =>
  also here reuse of (part of) the existing electronic design

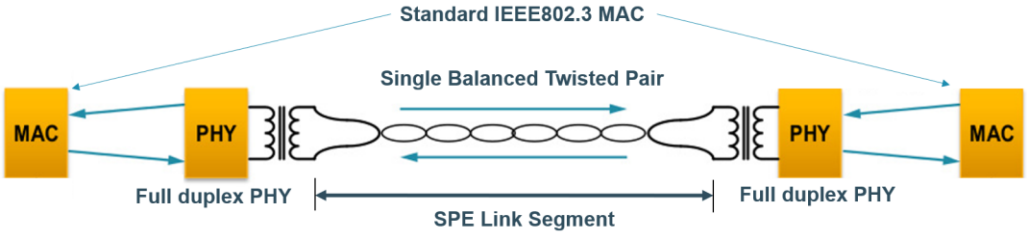

SPE: full duplex over one single twisted wire pair

Interfacing SPE PHY with standard 802.3 MAC

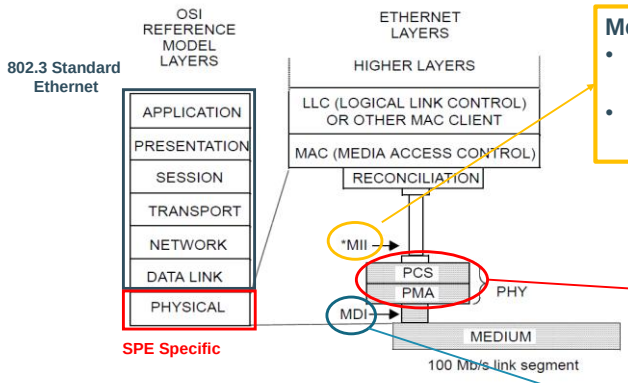

Media Independent Interface (MII)
- Standardized connection between MAC and different PHYs
- Standard 100 Mbit/s MII
  → transmits 4 bit nibbles at 25 MHz

Physical Coding Sublayer (PCS) and Physical Medium Attachment (PMA)
- Converts data received from MAC to the suitable physical signal
- Places physical on MDI

Media Dependent Interface (MDI)
- Physical interface
  = connectors + cabling

MDI = MEDIUM DEPENDENT INTERFACE
MII = MEDIA INDEPENDENT INTERFACE
* Physical instantiation of MII is optional.

PCS = PHYSICAL CODING SUBLAYER
PMA = PHYSICAL MEDIUM ATTACHMENT
PHY = PHYSICAL LAYER DEVICE
PMD = PHYSICAL MEDIUM DEPENDENT

SPE: full duplex over one single twisted wire pair

- Both transmitters send simultaneously → signals are superimposed on cable
- PHY must separate transmitted and received signal → **hybrid** circuit

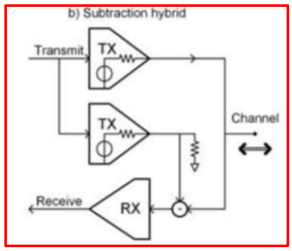

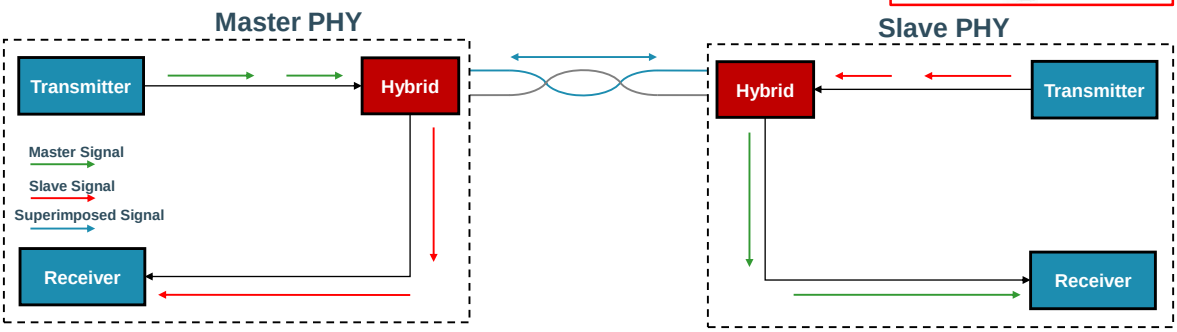

SPE: full duplex over one single twisted wire pair

- But… impedance mismatches exist → part of transmitted signal reflected: “echo”
- Echo should not be interpreted as a received signal from partner PHY
  → **Removed by Echo Canceller** (signals drawn only on Master side)

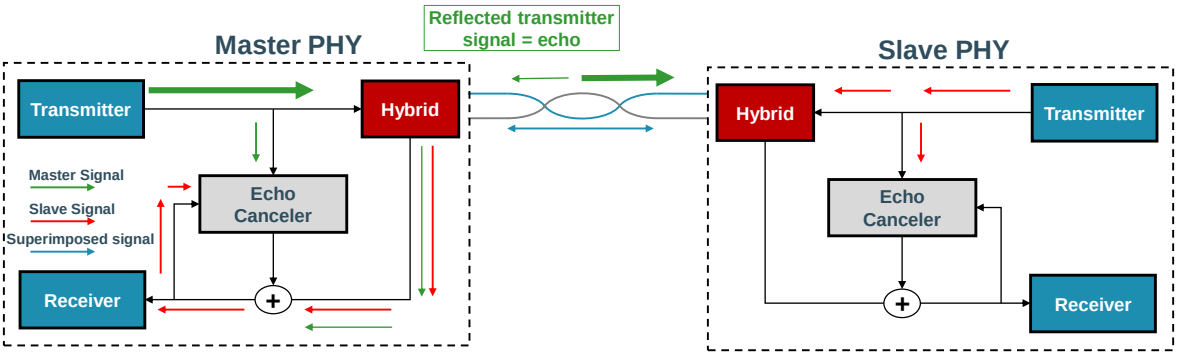

SPE: full duplex over one single twisted wire pair

- How do 100BASE-T1 signals look like?

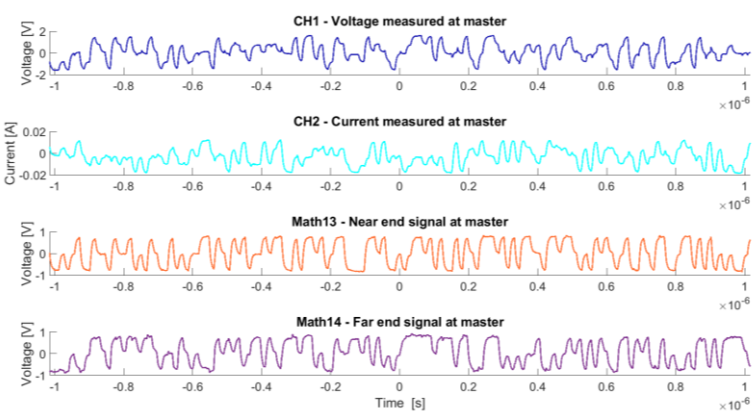

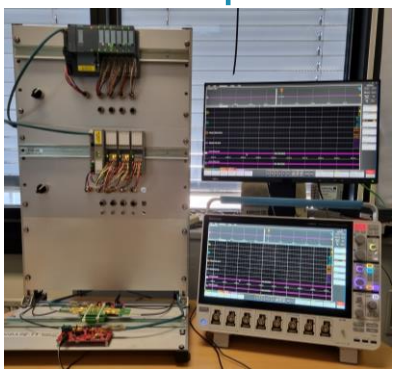

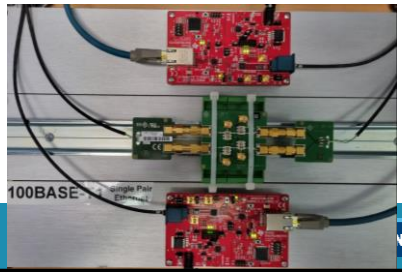

Measurements with 8 CH Tektronix, TEK specific measuring principle

SPE: full duplex over one single twisted wire pair

- Surprise: it's nothing new …
- Your 1 Gbps Ethernet uses … SPE signaling

Use all four pairs with full-duplex transmission on each pair. (Requires hybrid.)

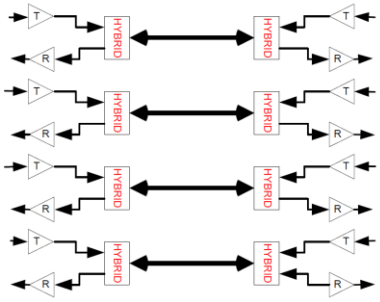

1000BASE-T uses DSP-based adaptive filtering to cancel the effects of echo, crosstalk and noise

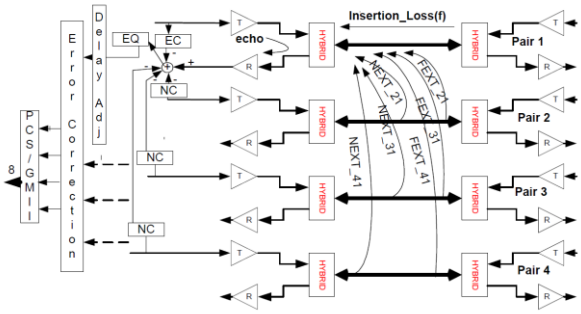

Outline

- Introduction
  - What is Single Pair Ethernet?
  - Advantages of Single Pair Ethernet
  - Single Pair Ethernet Standards
- SPE: full duplex over one single twisted wire pair – How?
- **Ethernet frame – Signal encoding**
- Power over Data Line (PoDL)
- Cabling and Connectors
- Ethernet Advanced Physical Layer (APL)
- Conclusion

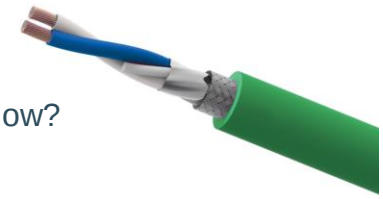

The Ethernet Frame

- Ethernet frame remains the same, except preamble and Inter Frame Gap (IFG)
  - **S**tart- and **E**nd-of-**S**tream **D**elimiter added (SSD and ESD)

Also in e.g. PRP redundancy and "in the wireless phase" in WiFi you get a header/trailer: invisible for the end user

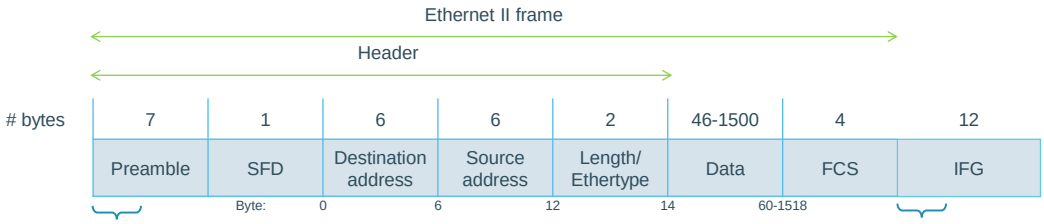

Start-of-Stream Delimiter (SSD)
- Replaces first x bits of preamble
  - 10BASE-T1L: 16 bits
  - 100BASE-T1: 9 bits
  - 1000BASE-T1: 9 bits

End-of-Stream Delimiter (ESD)
- Replaces first y bits of IFG
  - 10BASE-T1L: 16 bits
  - 100BASE-T1: 9 bits
  - 1000BASE-T1: 9 bits

100BASE-T1 Signal Encoding

- Different standards = different physical signals
- But... they share common encoding principles (except 10BASE-T1S)

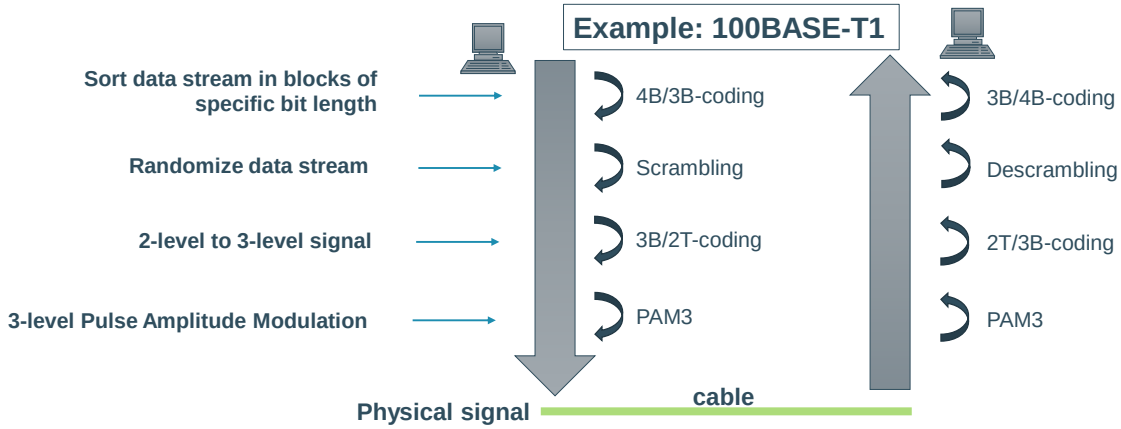

100BASE-T1 and 1000BASE-T1

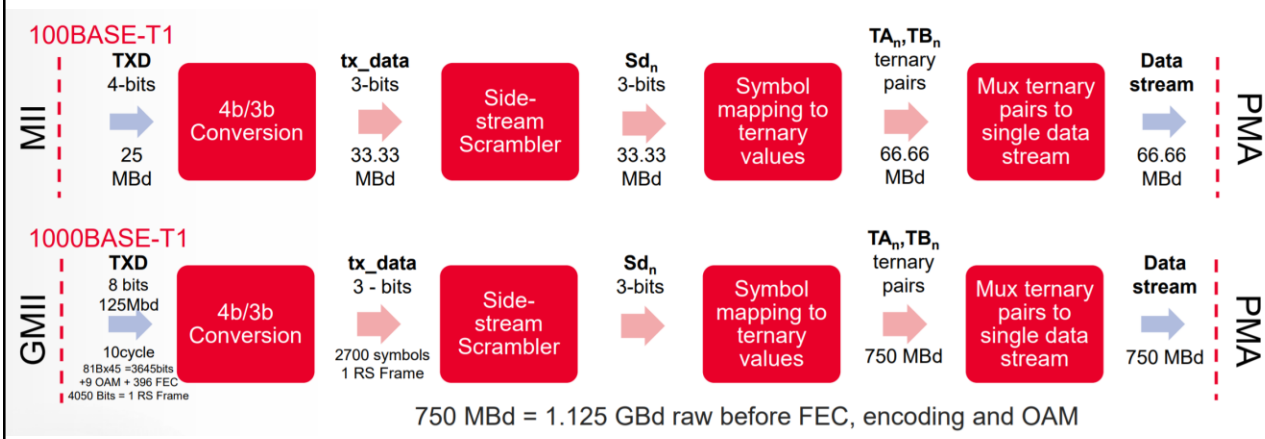

100BASE-T1 PCS

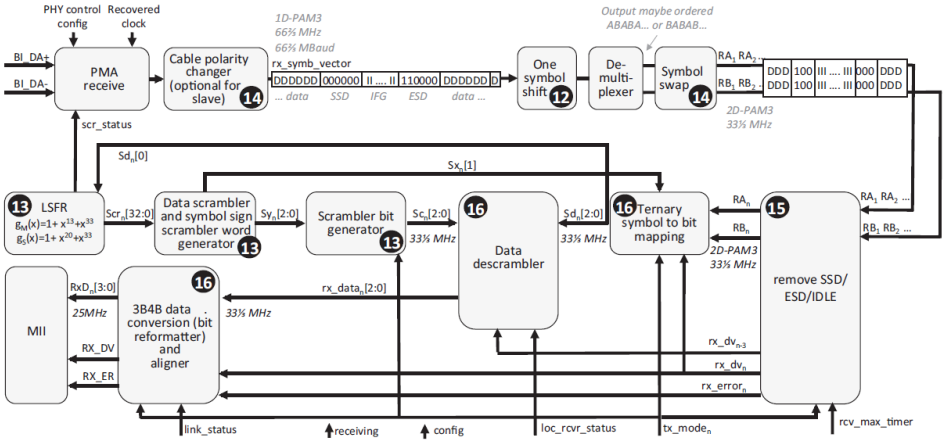

Figure 4.29 Example for elements of a 100BASE-T1/OABR PCS receiver.

100BASE-T1 – 4bit/3bit Encoding

- Data stream from MAC layer → 4-bit nibbles at 25 MHz
- Convert to 3-bit blocks at 33,3 MHz

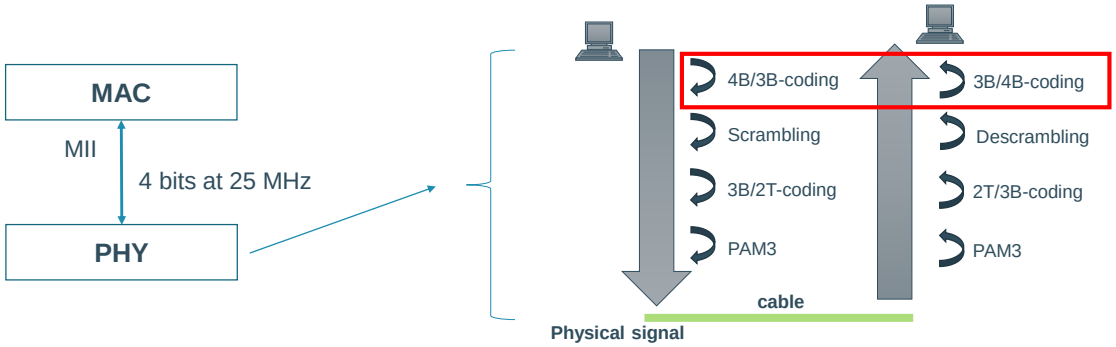

100BASE-T1 Scrambling

- Data stream scrambled using a pseudo-random code
- Prevent loss of synchronization between PHYs
- Spread transmit power over frequency band
- Reduces DC portion of signal
- Reduces electromagnetic interference
- Reduces radiated emissions

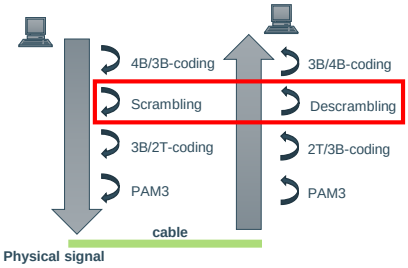

Scrambler function

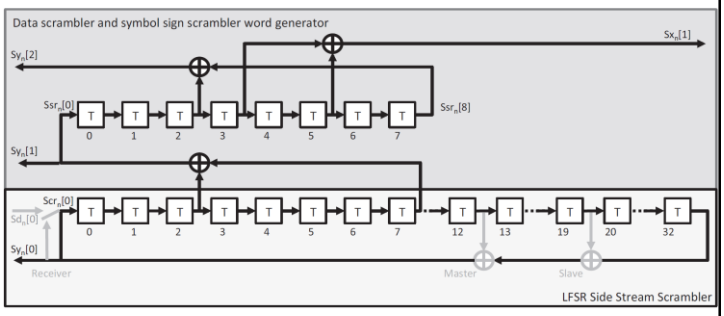

Automotive Ethernet; K. Matheus, T. Königseder

100BASE-T1 – 3bit/2ternary encoding

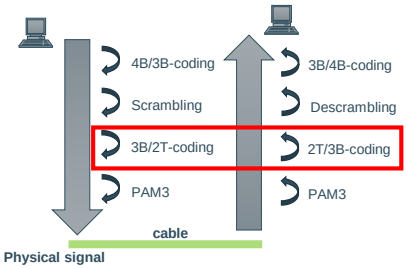

- Ternary = 3-level value (-1, 0, 1)
- 3-bit blocks coded into 2 ternaries – 9 possibilities
- Coding table dependent on PHY status

Table 96–2—Data symbols when tx_mode=SEND_N

$Sd_n[2:0]$	TA_n	TB_n
000	–1	–1
001	–1	0
010	–1	1
011	0	–1
Used for SSD/ESD	0	0
100	0	1
101	1	–1
110	1	0
111	1	1

Encoding example

3B	001	100	111
2T	-1, 0	0, 1	1, 1

TI : 100BASE-T1 Ethernet: the evolution of automotive networking

PAM3-Modulation

*Measurement methods discussed during demo

- 3-level Pulse Amplitude Modulation (PAM3)
  - 3 amplitude levels (Ternary) → -1, 0, 1
- Transmitted at 66,6 MHz, 1 ternary every 15 ns
- Full duplex transmission → 2 PAM3 signals superimposed on cable

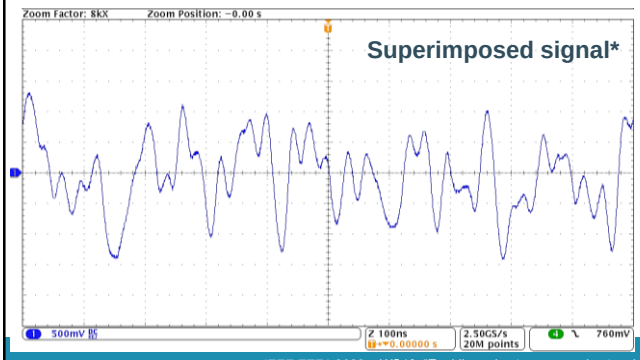

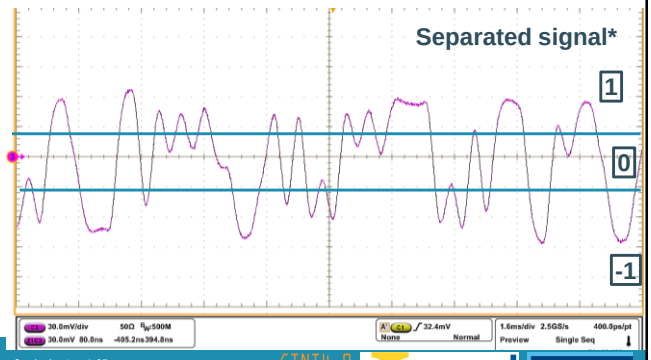

*Measurement methods discussed during demo

PAM3-Modulation

Superimposed signal*

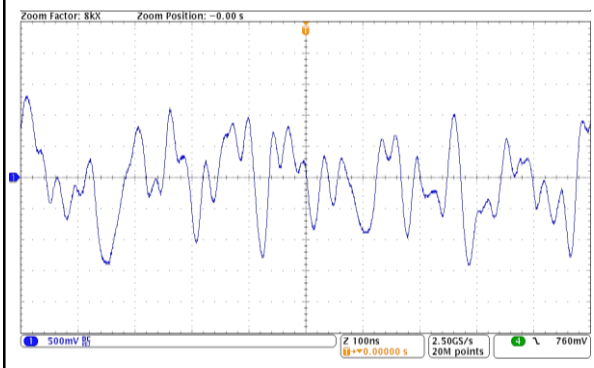

Separated signal*

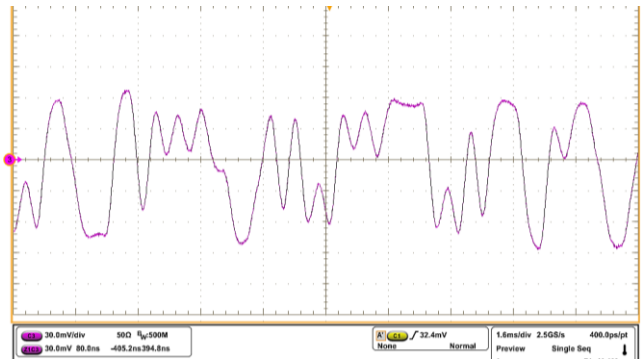

PAM3-Modulation

- 100BASE-T1 has a reduced frequency content compared to 100BASE-TX

100BASE-TX

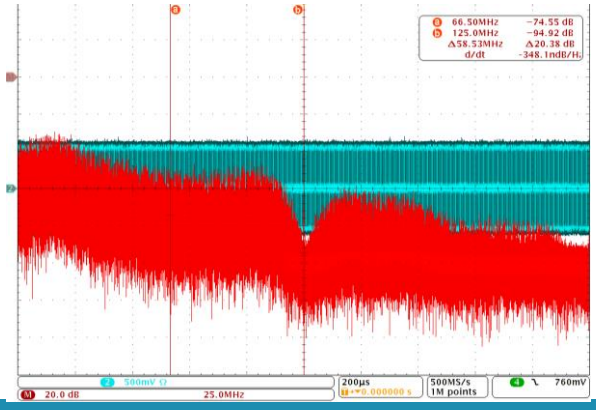

100BASE-T1

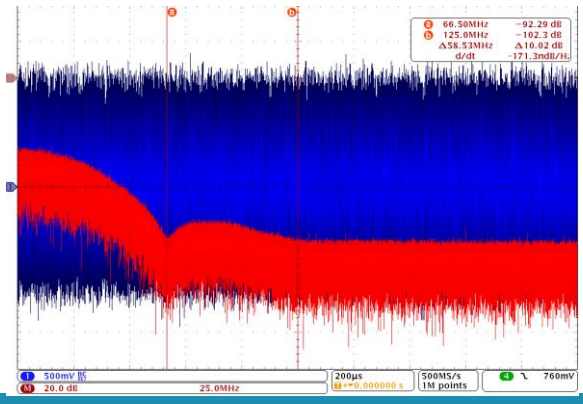

100BASE-T1 Summary

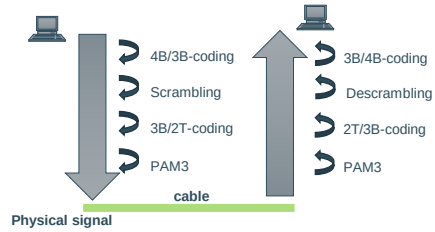

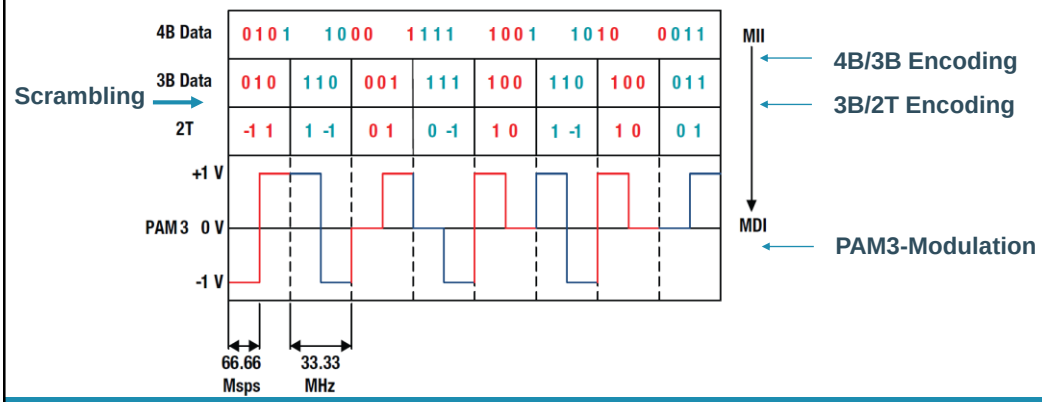

10BASE-T1L Encoding

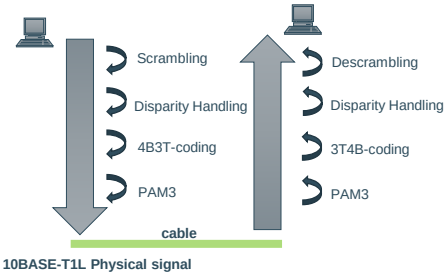

- 2 Amplitude options: 1 V_{ptp} and 2.4 V_{ptp}
- Max cable length: 1000 m
- Encoding systems
  - Scrambling, Disparity handling, 4B3T, PAM3

- Disparity = difference between transmitted "+1" and "-1" symbols
- Disparity handling
  - **Goal** → Achieve DC-free PAM3 transmission = DC-free 4B3T coding
  - **How** → Change 4B3T coding table based on disparity

10BASE-T1L Clause 164 Rev. D

10BASE-T1L Disparity handling

- Default disparity = 2
- E.g. data stream

  0011 1001 1100

  Disparity +1 Disparity +1 Disparity -1

- 4B3T Coding

  00+ +-+ -+-

  Resulting disparity = 3

Default

$Sd_n[3:0]$	Disparity = 1		Disparity = 2		Disparity = 3		Disparity = 4	
	Ternary Triplet	Disparity Change	Ternary Triplet	Disparity Change	Ternary Triplet	Disparity Change	Ternary Triplet	Disparity Change
0000	+0+	2	0-0	-1	0-0	-1	0-0	-1
0001	0-+	0	0-+	0	0-+	0	0-+	0
0010	+-0	0	+-0	0	+-0	0	+-0	0
0011	00+	1	00+	1	00+	1	--0	-2
0100	-+0	0	-+0	0	-+0	0	-+0	0
0101	0++	2	-00	-1	-00	-1	-00	-1
0110	-++	1	-++	1	--+	-1	--+	-1
0111	-0+	0	-0+	0	-0+	0	-0+	0
1000	+00	1	+00	1	+00	1	0--	-2
1001	+-+	1	+-+	1	+-+	1	---	-3
1010	++-	1	++-	1	+--	-1	+--	-1
1011	+0-	0	+0-	0	+0-	0	+0-	0
1100	+++	3	-+-	-1	-+-	-1	-+-	-1
1101	0+0	1	0+0	1	0+0	1	-0-	-2
1110	0+-	0	0+-	0	0+-	0	0+-	0
1111	++0	2	00-	-1	00-	-1	00-	-1

4B3T Coding based on disparity

10BASE-T1L Clause 164 Rev. D

10BASE-T1L Scrambler

$$g_M(x) = 1 + x^{13} + x^{33}$$
$$g_S(x) = 1 + x^{20} + x^{33}$$

Side-stream scrambler employed by the MASTER PHY

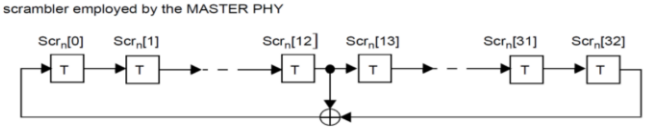

Side-stream scrambler employed by the SLAVE PHY

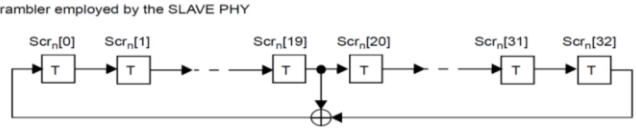

10BASE-T1L Transmit Symbol Generation Block Diagram

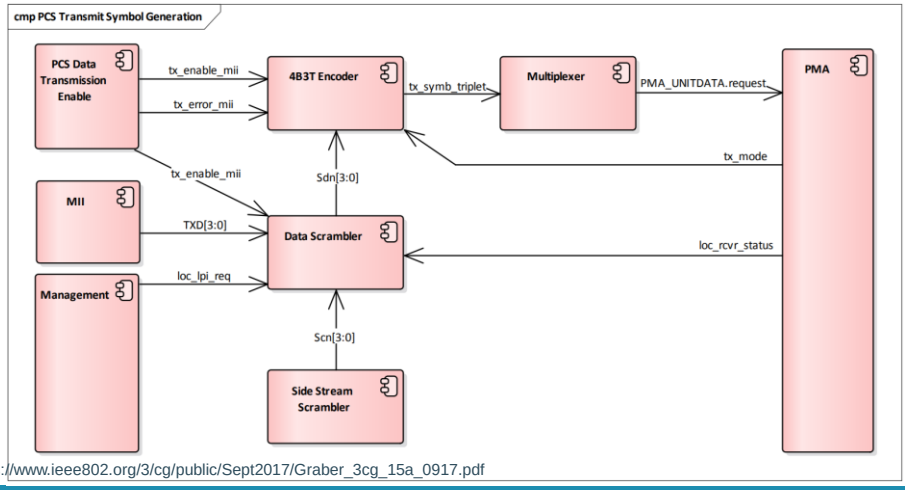

https://www.ieee802.org/3/cg/public/Sept2017/Graber_3cg_15a_0917.pdf

Outline

- Introduction
  - What is Single Pair Ethernet?
  - Advantages of Single Pair Ethernet
  - Single Pair Ethernet Standards
- SPE: full duplex over one single twisted wire pair – How?
- Ethernet frame – Signal encoding
- **Power over Data Line (PoDL)**
- Cabling and Connectors
- Ethernet Advanced Physical Layer (APL)
- Conclusion

PoE and PoDL Principles

*Power to device

2 Types of devices

- Load: **P**owered **D**evice **PD**
- Source: **P**ower **S**ourcing **E**quipment **PSE**

- **Power over Ethernet (PoE)**
  - PSE and PD connected through transformer center taps
  - 44-57 V
  - Max. 25,5 W* (802.3at, **4-wire cabling**)

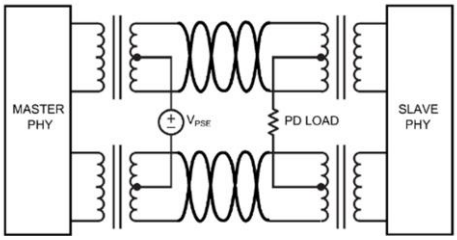

- **SPE – Power over Data Line (PoDL)**
  - PSE and PD Connected through highpass/lowpass band splitting network
  - 12, 24, 48 V
  - Max. 50 W (802.3bu)

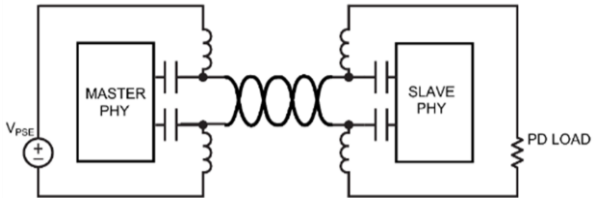

"A Quick Walk Around the Block with PoDL", D. Dwelly. IEEE P802.3bu Power over Data Lines Tutorial – November 2015 IEEE 802.3 Plenary

PoDL power classes (802.3bu)

	12 V Unregulated PSE		12 V Regulated PSE		24 V Unregulated PSE		24 V Regulated PSE		48 V Regulated PSE	
Class	**0**	**1**	**2**	**3**	**4**	**5**	**6**	**7**	**8**	**9**
$V_{PSE(max)}$ (V)	18	18	18	18	36	36	36	36	60	60
$V_{PSE_OC(min)}$ (V)	6	6	14.4	14.4	12	12	26	26	48	48
$V_{PSE(min)}$ (V)	5.6	5.77	14.4	14.4	11.7	11.7	26	26	48	48
$I_{PI(max)}$ (mA)	101	227	249	417	97	339	215	461	735	1360
$P_{Class(min)}$ (W)	0.566	1.31	3.59	6.79	1.14	3.97	5.59	12	35.3	65.3
$V_{PD(min)}$ (V)	4.94	4.41	12	10.6	10.3	8.86	23.3	21.7	40.8	36.7
$P_{PD(max)}$ (W)	0.5	1	3	5	1	3	5	10	30	50

$V_{PSE(max)}$ → Maximum allowed voltage at the PSE PI over the full range of operating conditions
$V_{PSE_OC(min)}$ → Minimum allowed open circuit voltage measured at the PSE PI
$I_{PI(max)}$ → Maximum current flowing at the PSE and PD PIs except during inrush or an overload condition
$P_{Class(min)}$ → Minimum average available output power at the PSE PI
$P_{PD(max)}$ → Maximum average available power at the PD PI

IEEE802.3bu

Extended SPE power classes for 10BASE-T1L (802.3cg)

Class	10	11	12	13	14	15
$V_{PSE(max)}$ (V)	30	30	30	58	58	58
$V_{PSE_OC(min)}$ (V)	20	20	20	50	50	50
$V_{PSE(min)}$ (V)	20	20	20	50	50	50
$I_{PI(max)}$ (mA)	92	240	632	231	600	1579
$P_{Class(min)}$ (W)	1.85	4.8	12.63	11.54	30	79
$V_{PD(min)}$ (V)	14	14	14	35	35	35
$P_{PD(max)}$ (W)	1.23	3.2	8.4	7.7	20	52

$V_{PSE(max)}$ → Maximum allowed voltage at the PSE PI over the full range of operating conditions
$V_{PSE_OC(min)}$ → Minimum allowed open circuit voltage measured at the PSE PI
$I_{PI(max)}$ → Maximum current flowing at the PSE and PD PIs except during inrush or an overload condition
$P_{Class(min)}$ → Minimum average available output power at the PSE PI
$P_{PD(max)}$ → Maximum average available power at the PD PI

* Single-pair Power over Ethernet (SPoE) use these classes. Refer to Ethernet Alliance.

IEEE802.3cg
https://ethernetalliance.org/wp-content/uploads/2021/07/EA_TechBrief-SPE-SPoE_FINAL.pdf

Outline

- Introduction
  - What is Single Pair Ethernet?
  - Advantages of Single Pair Ethernet
  - Single Pair Ethernet Standards
- SPE: full duplex over one single twisted wire pair – How?
- Ethernet frame – Signal encoding
- Power over Data Line (PoDL)
- **Cabling and Connectors**
- Ethernet Advanced Physical Layer (APL)
- Conclusion

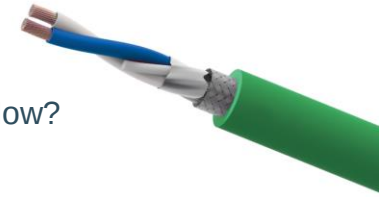

(Industrial) Cabling for Single Pair Ethernet

"The standard makes the impossible possible in terms of utilizing Ethernet for two-wire long-distance communications" (TI [1])

(1) Application Report: Extend Network Reach with IEEE 802.3cg 10BASE-T1L Ethernet PHYs, Texas Instruments

- **100BASE-T1, 1000BASE-T1**
  - 40 m
  - Shielded
  - Defined in IEC 61156-11 (fixed installation) and IEC 61156-12 (flexible installation)
  - 600 MHz bandwidth required
  - 100 Ω characteristic impedance

- **10BASE-T1L**
  - (Minimum) 200 m (1 V_{ptp}), 1000 m (2.4 V_{ptp}) *(TI: 1000 m (1 V_{ptp}), up to 2000 m (2.4 V_{ptp}))*
  - Shielded
  - 20 MHz bandwidth required
  - Cabling requirements fit Fieldbus type A cable (e.g. PROFIBUS PA, Foundation Fieldbus) !
  - 100 Ω characteristic impedance

Negotiation phase has different properties !

https://www.ieee802.org/3/cg/public/Sept2017/Graber_3cg_15a_0917.pdf

100BASE-T1 negotiation
Lowest frequency 8 MHz

10BASE-T1L negotiation
Lowest frequency 312,5 kHz

- (Long) Brownfield cables with high insertion losses around 500 kHz may limit the T1L length

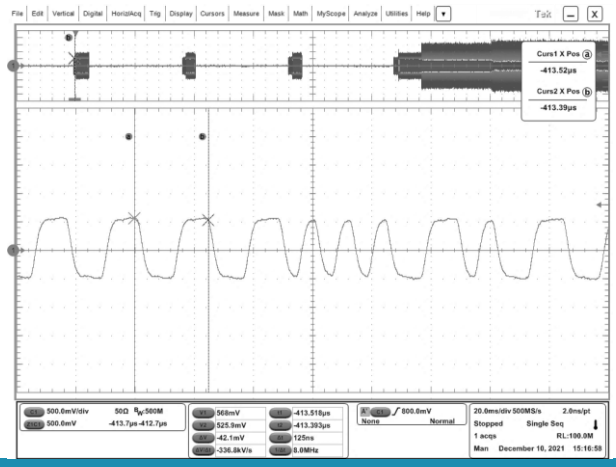

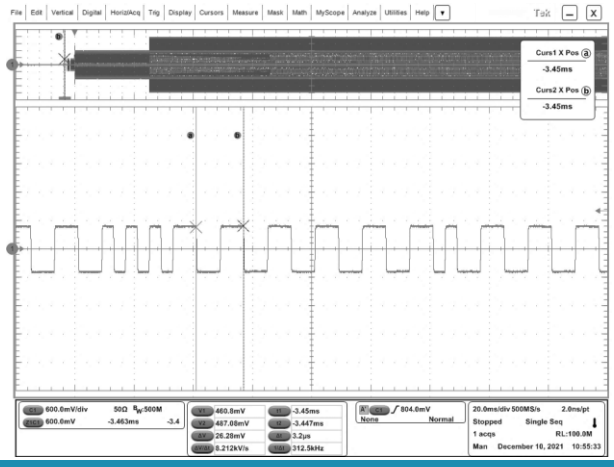

Cabling Parameters – Measurement example

- Insertion loss measurements on fieldbus cable *(Texas Instruments)*
- Black is the reference. Cable complies (also for auto-negotiation), until 1000 m (and up to 2000 m in forced mode for "negotiation")

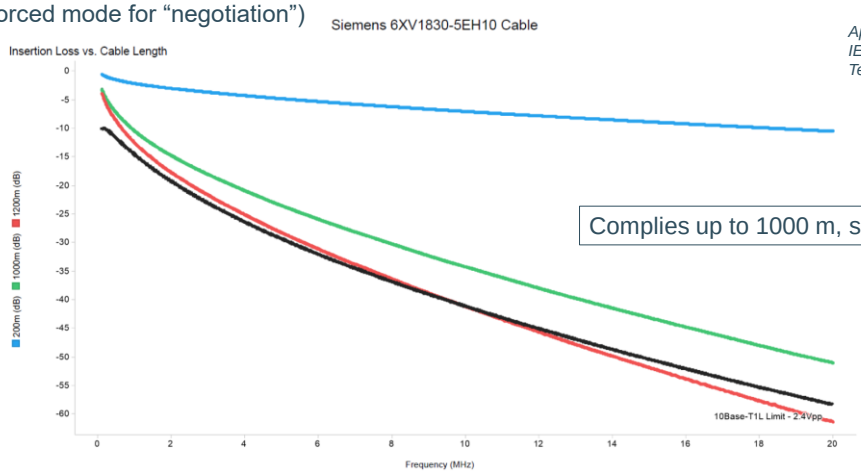

Application Report: Extend Network Reach with IEEE 802.3cg 10BASE-T1L Ethernet PHYs, Texas Instruments

200 m

Complies up to 1000 m, small violation for 1200 m

1000 m

10BASE T1L reference

1200 m

Cabling Parameters – Measurement example

- Insertion loss measurements on fieldbus cable *(Texas Instruments)*
- Black is the reference. Cable does not comply for these lengths (for auto-negotiation until 260 m OK), and up to 600 m in forced mode "negotiation".

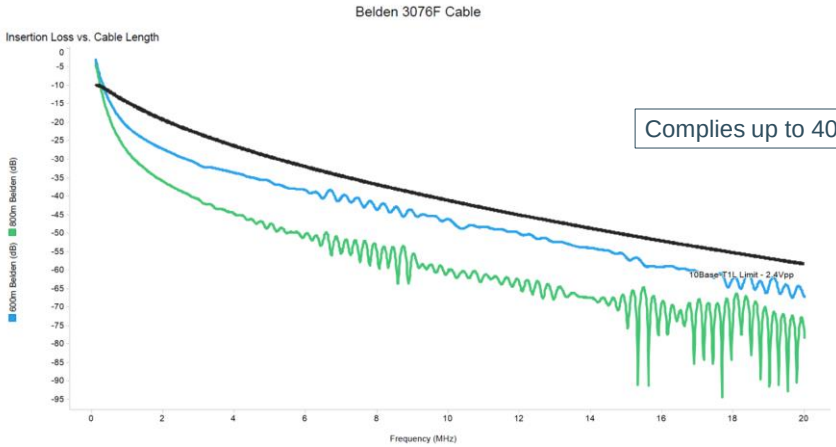

Complies up to 400 m

600 m

800 m

10BASE-T1L Reference

Application Report: Extend Network Reach with IEEE 802.3cg 10BASE-T1L Ethernet PHYs, Texas Instruments

Industrial connectors for SPE

- Defined in IEC 63171
- IP20-IP67
- M8, M12, Plugin connectors
- 4-wire hybrid connectors with 2 data and 2 power pins exist

Industrial connectors for SPE

ISO/IEC 63171 CONNECTORS FOR ELECTRICAL AND ELECTRONIC EQUIPMENT

	IEC 63171-1	IEC 63171-2	IEC 63171-3	IEC 63171-4	IEC 63171-5	IEC 63171-6
Company	Commscope	PxC, WM, RdM	SIEMON	BKS	PxC, WM, RdM	Harting
Picture	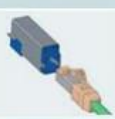					
Type	LC-Style	Rectangle	TERA 1P	Square-shaped	M8 / M12	Rectangle / M8 / Push Pull
#Pairs	1	1	1 / 4	1	1 / 4	1
Degree of protection	IP20	IP20	IP20	IP20	IP67	IP20 / IP67

Outline

- Introduction
  - What is Single Pair Ethernet?
  - Advantages of Single Pair Ethernet
  - Single Pair Ethernet Standards
- SPE: full duplex over one single twisted wire pair – How?
- Ethernet frame – Signal encoding
- Power over Data Line (PoDL)
- Cabling and Connectors
- **Ethernet Advanced Physical Layer (APL)**
- Conclusion

Ethernet – APL (Advanced Physical Layer)

- Ethernet-APL is more than just Single Pair Ethernet.
- Ethernet-APL is made up of
  - Single Pair Ethernet (IEEE 802.3cg-2019, 10BASE-T1L)
  - 2-WISE: 2-Wire Intrinsically Safe Ethernet (IEC 60079) (compare to FISCO)
  - Type A fieldbus cable (IEC 61158-2, for intrinsic safety).
- The Ethernet-APL cable specification is important because end users can potentially re-use existing installed Type A fieldbus cable.
  - Characteristic impedance 100 Ω.
  - Type A two-wire cable with shielding is polarity independent to reduce installation errors.
  - Up to 10 connections:

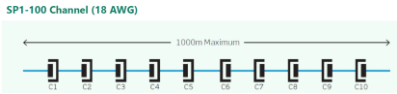

  - Few tools (screwdriver, wire preparation tools to physically connect) needed.
  - Analog Devices showed on the HM 2022 combined TSN and T1L in one device, including cable "ageing and wear" detection.

Refer to lecture "APL - Advanced Physical Layer: SPE for the process industry"

Also refer to Lapp (and Helmholz), Igus, Indu-Sol for "ageing and wear" detection.

The Goal of Ethernet-APL

"Bring Ethernet to the field"

- 1 Ethernet network for Field and Control level
- Facilitate IIoT and Industry 4.0
- Allow easy migration from existing brownfield

All devices based on Ethernet

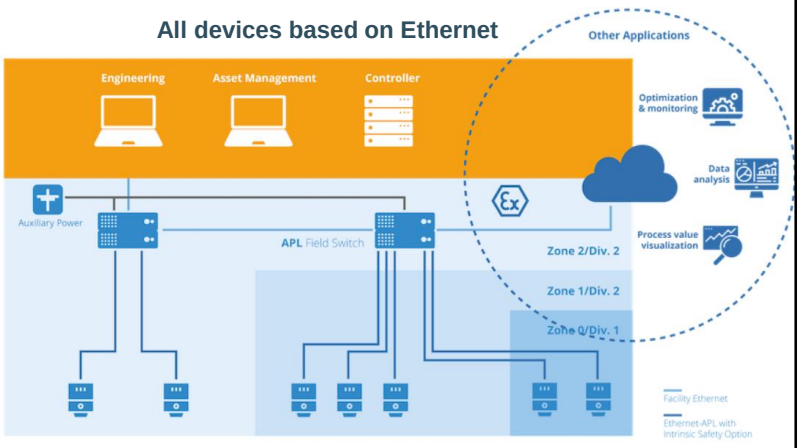

What is Ethernet-APL

"Extension to 10BASE-T1L for use in the process industry"

- 10 Mbit Ethernet (10BASE-T1L)
- 2-Wire cabling, optional re-use of existing Fieldbus infrastructure
  - Reference cable is fieldbus type A cable, IEC 61158-2 (e.g. PROFIBUS PA, Foundation Fieldbus)
- Long distances up to 1000 m
- Up to 10 inline connectors
- Power + data over a single wire pair
- Optional intrinsic safety with 2-Wire Intrinsically Safe Ethernet (2-WISE, IEC TS 60079-47)

APL Topology – Device types

APL Power switch
- Connects to industrial Ethernet network (e.g. PROFINET)
- Power and data to field switches (trunk)

APL Field switch
- Power and data to field devices (spur)

APL Auxiliary device
- Powered by APL Link
- No communication

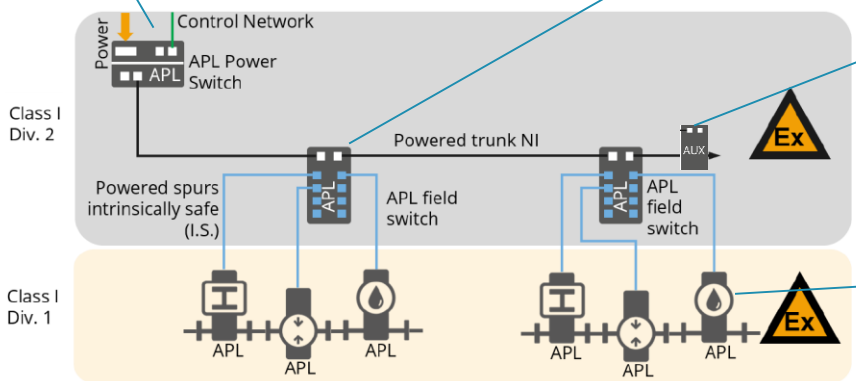

APL Field device
- Sensor/actuators
- Strictest IS classification

APL Topology – Link Types

Trunk line
- APL power- & field switches
- 1000 m
- 2.4 V_{ptp}
- High power (up to 57.5 W)

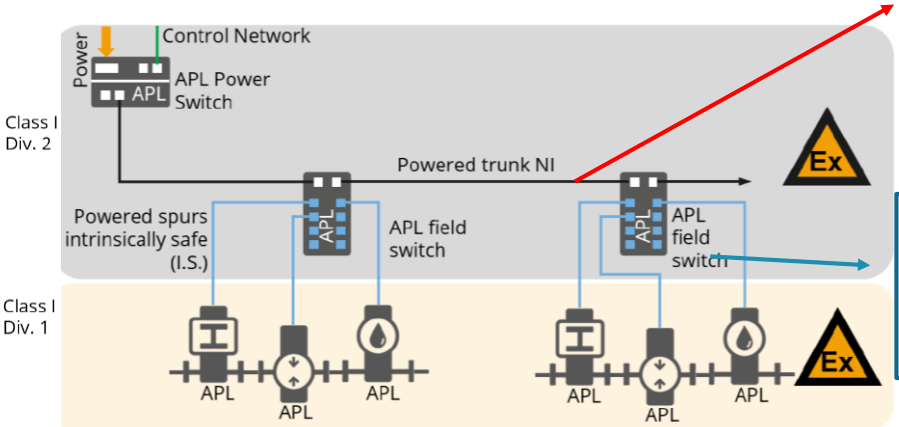

Spur line
- APL field switch & field device
- 200 m
- 1 V_{ptp}
- Low power (up to 1.1 W)
- Strictest IS classification

APL Topology – Source power classes

- Source power class 4 is still in progress

Source power class	Maximum voltage, minimum output power	Permitted segment class	Permitted load power classes
A	15 V DC / 0.54 W	S	A
C	15 V DC / 1.1 W	S	A, B, C
3	50 V DC / 57.5 W	T	3
4[6]	50 V DC / 92 W[6]	T	3, 4

Outline

- Introduction
  - What is Single Pair Ethernet?
  - Advantages of Single Pair Ethernet
  - Single Pair Ethernet Standards
- SPE: full duplex over one single twisted wire pair – How?
- Ethernet frame – Signal encoding
- Power over Data Line (PoDL)
- Cabling and Connectors
- Ethernet Advanced Physical Layer (APL)
- **Conclusion**

Single Pair Ethernet

- SPE provides another physical layer that can be used by the network design engineer
- ... But with some distinct advantages!
  - Smaller, lighter, simpler cabling and connectors, simpler field assembly
  - Nothing changes in the OSI Layer 2-7
- Different SPE standards allow for flexible network design
  - High bandwidth
  - Long distance
  - Power over Data Line
  - Ethernet-APL
  - …

Questions?