TSN performance assessment in brownfield PROFINET implementations - demonstration

IEEE ETFA 2022 – WS10
“Enabling robust, converged networks for Industry 4.0”
06/09/2022 – Stuttgart (Germany)

Most recent version of the presentation

Arne Verhoeven
Dimitri De Schuyter
Mathieu Troch
Philippe Saey (lecturer)

Outline

- Test network: topology and configuration
- Measurement methods
- End-to-end delay measurement - demonstration

- **Test network: topology and configuration**
- Measurement methods
- End-to-end delay measurement - demonstration

Test network: topology and configuration

Performance evaluation of brownfield PN over TSN

- **Industry relevant PN network**
  - 50 IO-Devices @ 1 ms → 35% PN netload
  - Relevant for all networks with update times ≥ 1 ms
- **OT/IT Convergence** → Injection of Best-Effort (BE) traffic
  - Strict control of netload and frame size
    - 35% BE Netload
    - 1538 byte frame length
  - Artificial traffic generation
- **Analysis**
  - End-to-end delay (TAP1 – TAP2)
  - TSN behaviour (TAP3, TAP4)
  - Demonstration on stand!

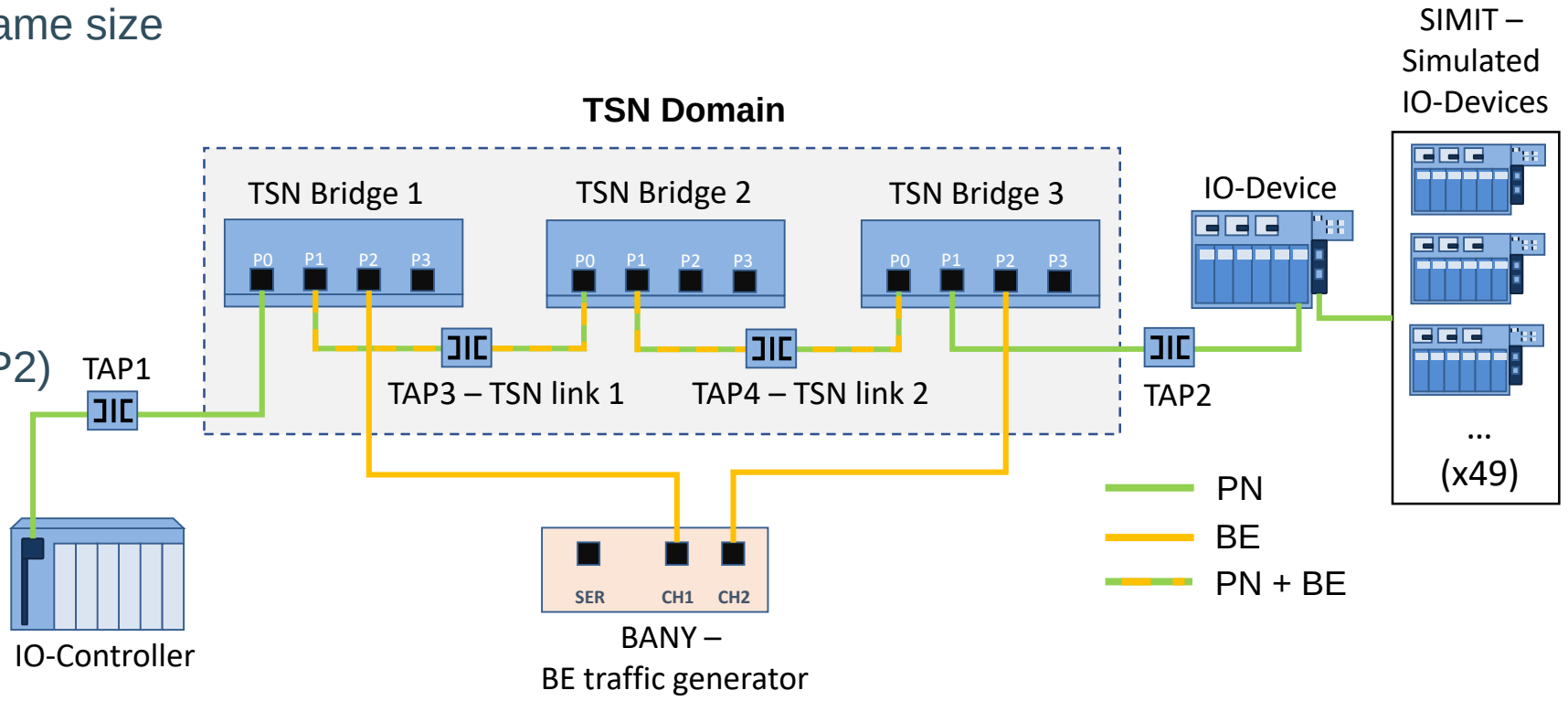

TSN Backbone

- 3x Relyum RELY-TSN-BRIDGE
- Line Topology
- Store and Forward
- 10/100/1000 Mbit/s
- Currently supported TSN standards
  - 802.1AS – Synchronization
  - 802.1Qbv – Time Aware Shaper
  - 802.1Qbu + 802.3Qbr – Frame preemption
  - (802.1CB – Seamless redundancy)

RELY_TSN_BRIDGE

- Test network: topology and configuration
- **Measurement methods**
- End-to-end delay measurement - demonstration

Measurement methods

Measurement tools for TSN network analysis

- Brownfield PN over TSN performance evaluation requires:
  - Accurate timestamps
  - Multiple measurement locations
  - Links speeds of 100 Mbit/s and Gbit/s
  - PROFINET specific diagnostics
  - Ability to decode preempted frames
  - …

Requirements are not met by a single device!

- Measurements can be performed on MAC layer and physical layer (see: SPE demo)

Summary – CINI4.0 measurement devices

Ethernet and PROFINET diagnostic devices

	Resolution (ns)	# of TAPs	PCAP Capture	Link speed (Mbit/s)	Link Statistics	PN specific diagnostics	Synchronization with 802.1AS	802.1Qbu Preempted frames support
Hilscher netANALYZER	Accuracy: ± 5 Resolution: 1	2	X	100	X	-	-	-
RELY-TSN-LAB	/*	2	-	100/1000	X	-	X	-
PROFISHARK	8	1	X	100/1000	X	-	-	X
Indu-Sol PN-Inspektor	10	1	X	100	X	X	-	-
PROCENTEC ATLAS	/	1	X	100	X	X	-	-
Siemens BANY	40	4	X	100	X	X	-	-
Eth. Decoding Oscilloscope	2	2	.CSV	100	-	-	-	-
Fraunhofer TSN Monitor	20	1 or 2	-	100/1000	-	-	-	-
Allegro Network Multimeter 500	/	2	X	100/1000	X	X	-	-
PROFITAP IOTA	8	1	X	100/1000	X	X	-	-

Summary – CINI4.0 measurement devices

Ethernet TAPs

	Link speed (Mbit/s)	Latency	Network interrupted in case of PSU failure?
Indu-Sol PNMA II	100	None	No
Scalance TAP104	100	None	No
PROFITAP C1R-1G	100/1000	1000 Mbit/s: 425ns 100 Mbit/s: 700 ns In-line jitter: 32 ns	Yes

Measurement tools used in this presentation

- **Hilscher netANALYZER NANL-B500E-RE**
  - 2 Internal TAPs
  - 100BASE-TX only
  - 1 ns resolution, ± 5 ns accuracy

- **PROFISHARK 1G**
  - Capable of measuring preempted frames
  - 100BASE-TX, 1000BASE-T
  - Specs:
    - Latency 1000BASE-T: 370 ns
    - Latency 100BASE-TX: 660 ns
    - In-line jitter: 32 ns
    - Resolution: 8 ns

- **PROFITAP C1R-1G**
  - 100BASE-TX and 1000BASE-T
  - Latency of network ports “in-line delay”
    - 1000BASE-T: 425ns
    - 100BASE-TX: 700 ns
  - Latency from network to TAP ports
    - 1000BASE-T: 425ns
    - 100BASE-TX: 700 ns

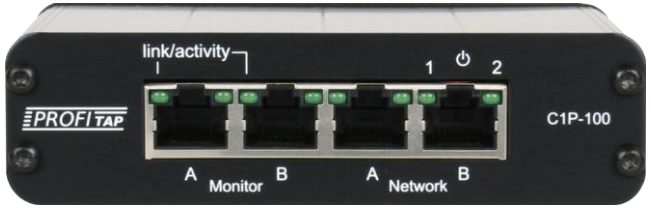

Traffic captures in Ethernet networks

- **100BASE-TX** TAPs are **passive** devices
  - No latency introduced
  - Power outage does not result in link failure

- **1000BASE-T** TAPs are **active** devices
  - Introduces **latency**
  - Power outage results in link failure
    - Redundant power supply, battery backup… for increased robustness

Active TAPs can influence delay measurements!

100BASE-TX TAP

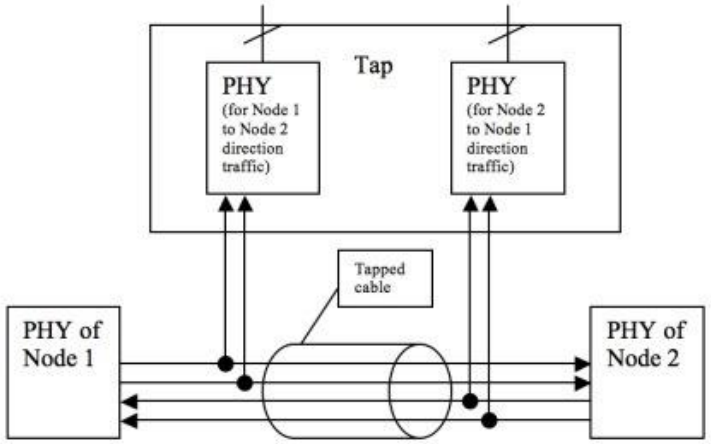

1000BASE-T TAP - powered

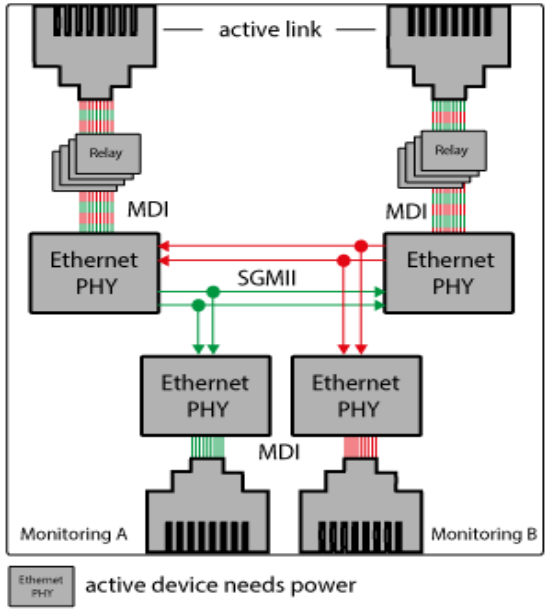

1000BASE-T TAP – power outage

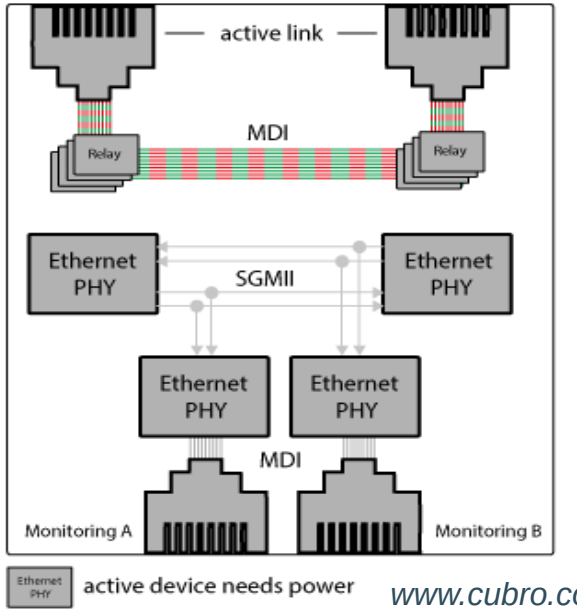

www.cubro.com

Outline – measurement methods

- Types of measurement
  - End-to-end delay → delay over a network
  - Forwarding delay → delay over 1 device
  - Preempted frames → analysis of TSN specific frames
- All measurement types require specific measurement parameters

Measurement method - end-to-end delay measurement

Hilscher netANALYZER

- 2 Internal TAPs
- ± 5 ns accuracy, 1 ns resolution
- $t_{(end-to-end)} = t_{TAP2} - t_{TAP1}$

TSN domain can also be configured as PN RT domain!

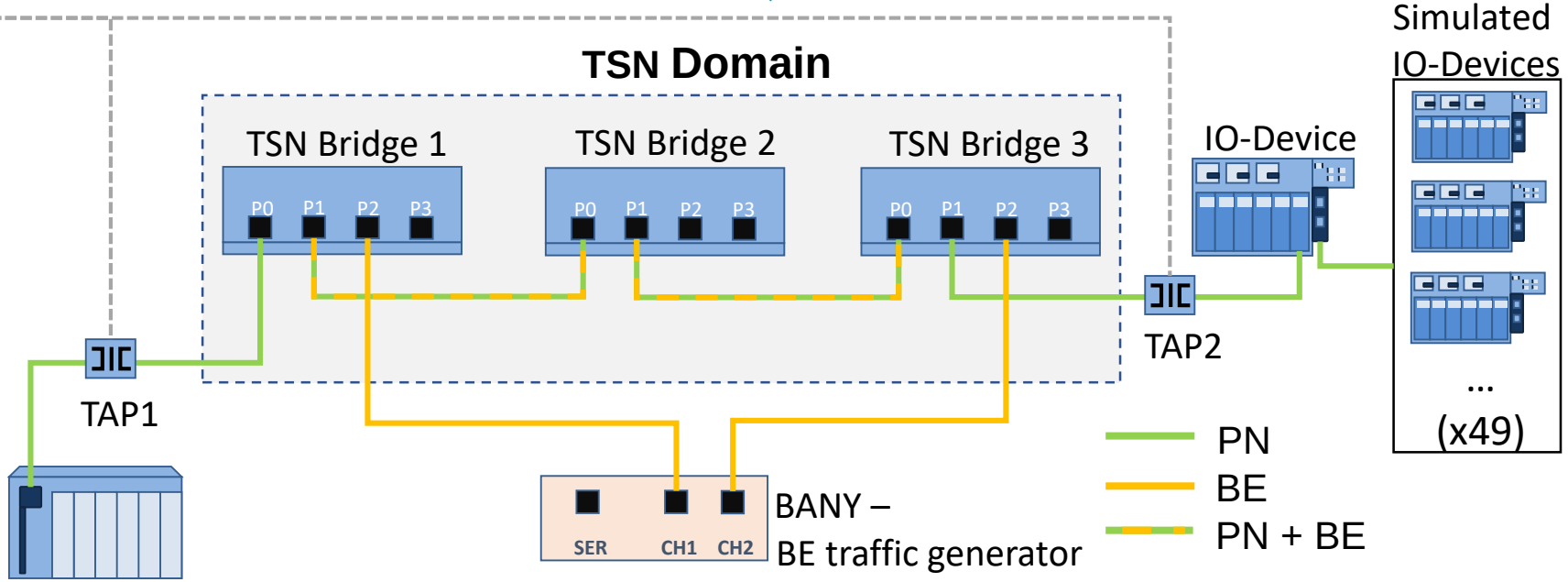

PROFINET load

- 50 IO-Devices
- 1 ms update time

= 35% PN load

Best-Effort load

- Long frames - 1538 bytes
- 35 Mbit/s on 100BASE-TX
- 350 Mbit/s on 1000BASE-T)

Measurement method – forwarding delay (100BASE-TX)

Hilscher netANALYZER

- 2 Internal TAPs
- ± 5 ns accuracy, 1 ns resolution
- $t_{(forwarding)} = t_{TAP2} - t_{TAP1}$

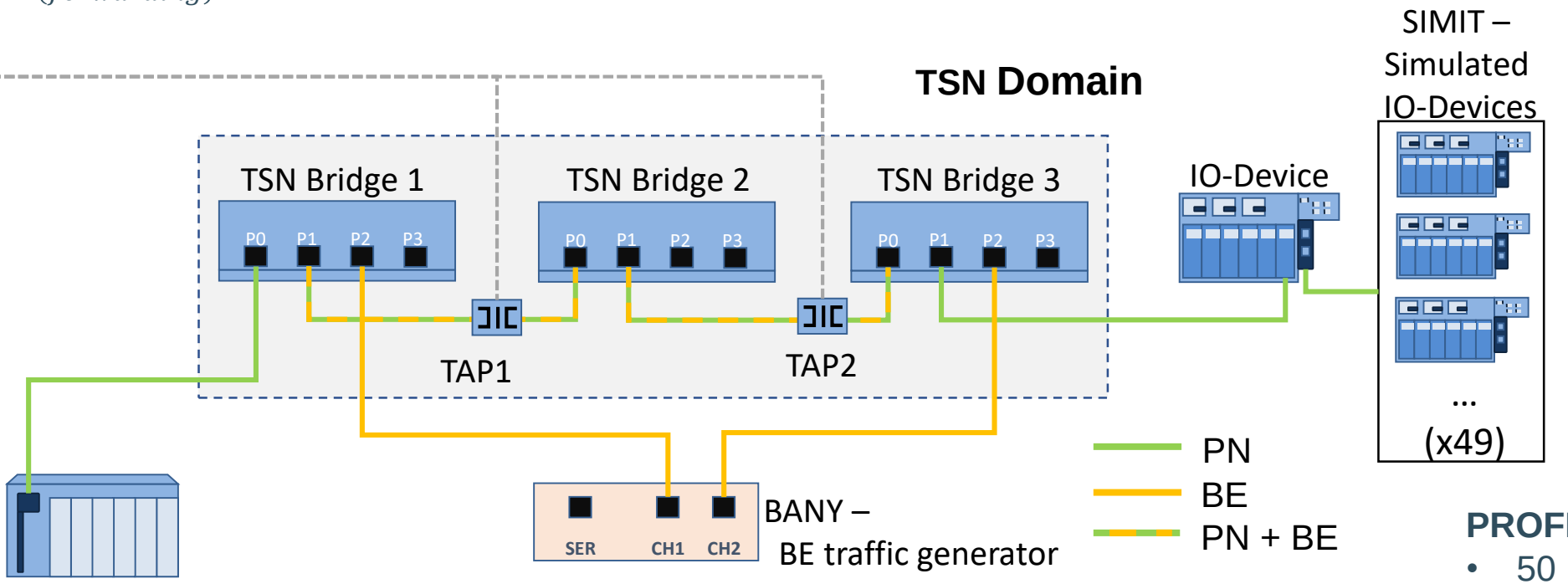

Best-Effort load

- Long frames - 1538 bytes
- 35 Mbit/s on 100BASE-TX
- 350 Mbit/s on 1000BASE-T)

PROFINET load

- 50 IO-Devices
- 1 ms update time

= 35% PN load

Measurement method – forwarding delay (1000BASE-T)

- PROFISHARK + PROFITAP
- Forwarding delay in 1 direction (only 2 ports on PROFISHARK)
- Network-to-TAP delay cancelled out (identical on both TAPs)
- **In-line delay of TAP added to measured forwarding delay**
  - 425 ns (1000BASE-T)
  - 700 ns (100BASE-TX)

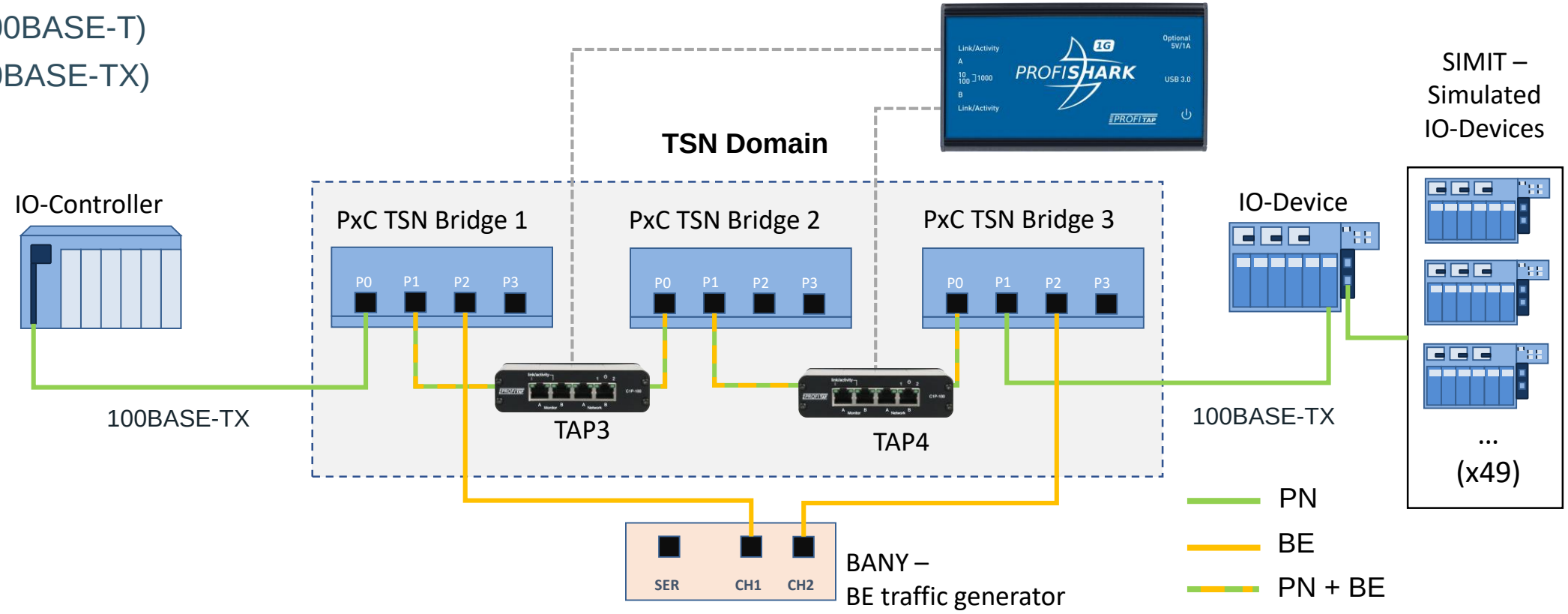

Analysis of preempted frames

- PROFISHARK placed directly in-line
- Preempted frames in both directions
- External TAPs not required as measurements are only performed in 1 link

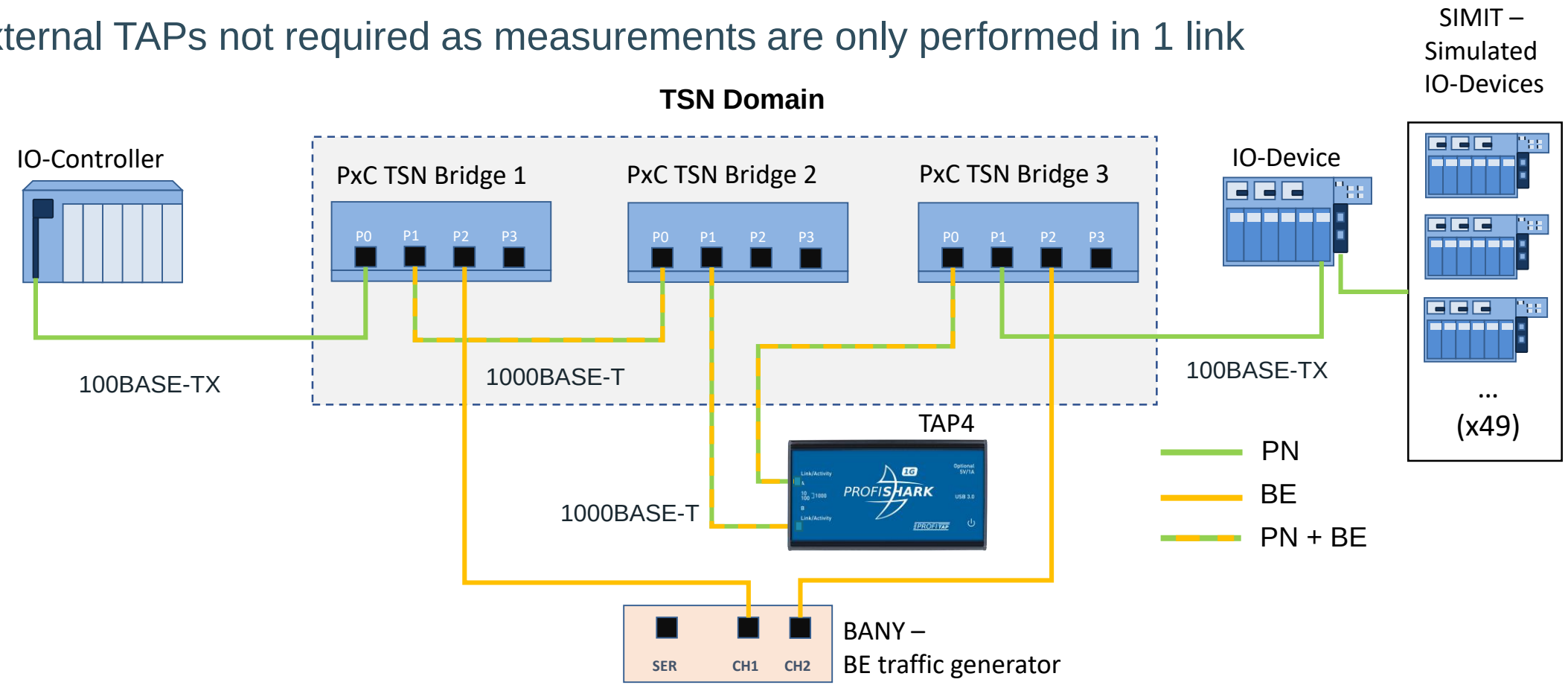

- Test network: topology and configuration
- Measurement methods
- **End-to-end delay measurement - demonstration**

End-to-end delay measurement - demonstration

Demonstrator

- Comparison between a “legacy” PN RT and a PN RT over TSN network
- Implemented TSN Features
  - 802.1AS – Synchronization
  - 802.1Qbv – Time Aware Shaper
  - 802.1Qbu + 802.3Qbr – Frame preemption
- Best-Effort traffic injected into the network

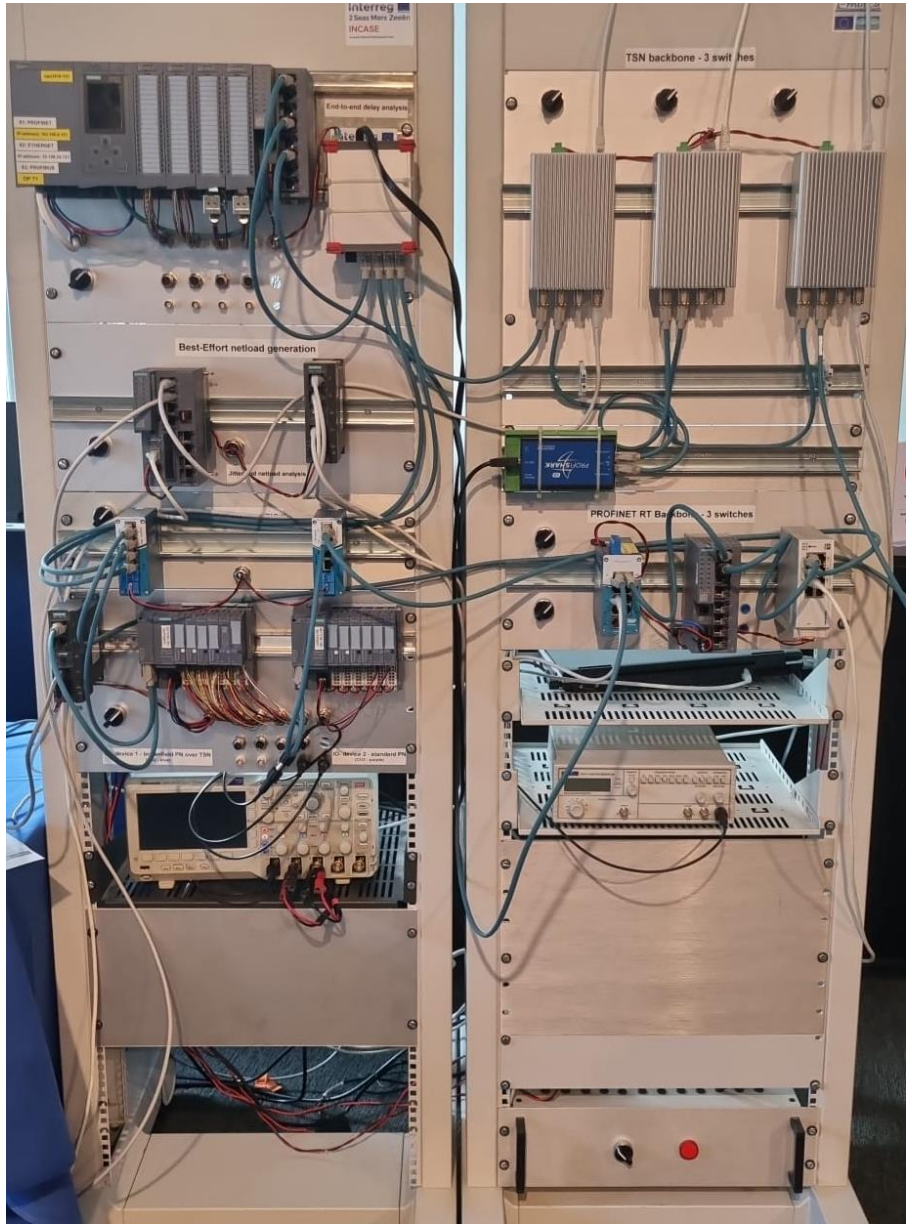

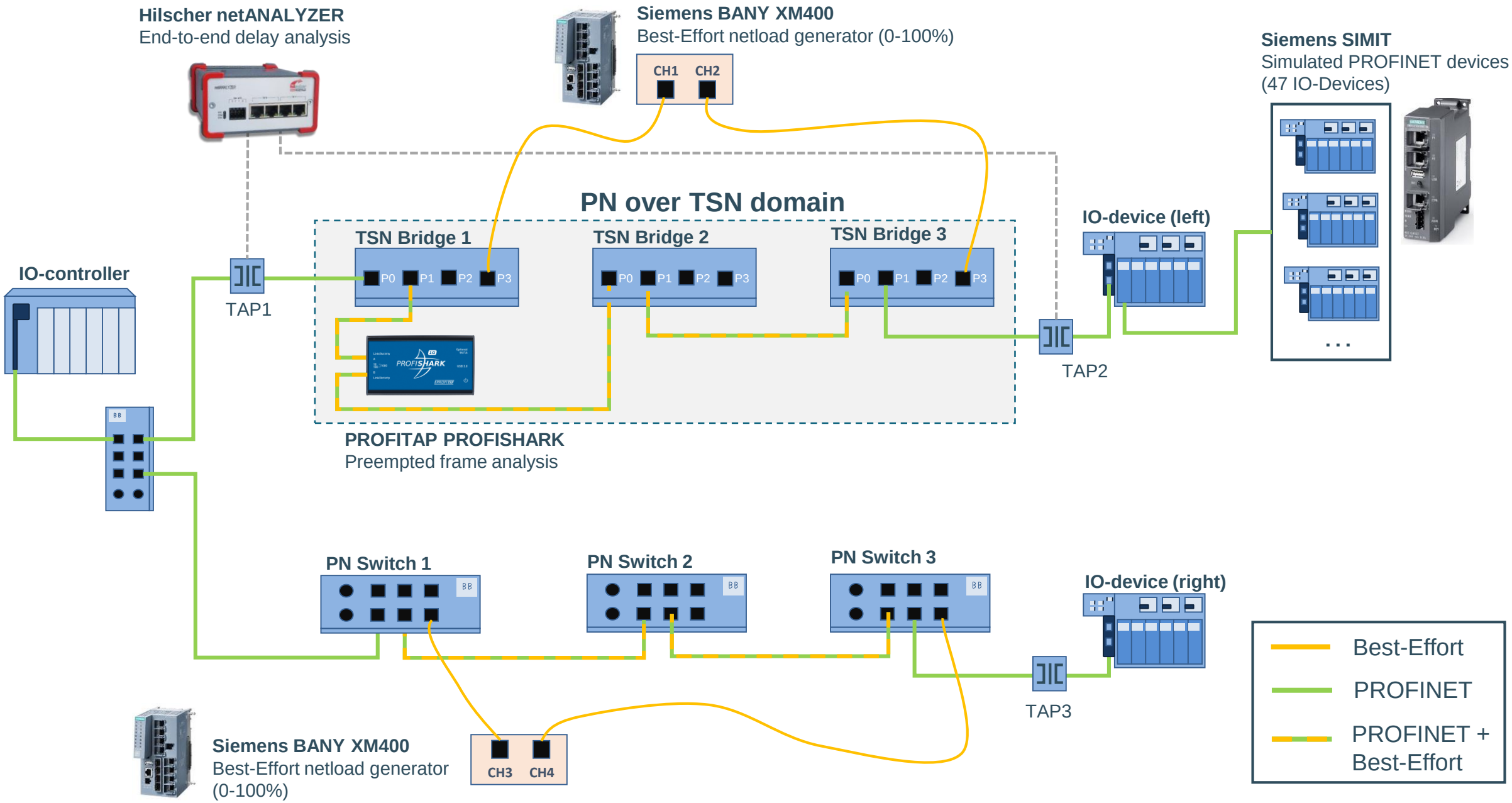
Hilscher netANALYZER
End-to-end delay analysis
Siemens BANY XM400
Best-Effort netload generator (0-100%)
CH1
CH2
Siemens SIMIT
Simulated PROFINET devices
(47 IO-Devices)
PN over TSN domain
TSN Bridge 1
TSN Bridge 2
TSN Bridge 3
P0
P1
P2
P3
IO-device (left)
IO-controller
TAP1
TAP2
PROFITAP PROFISHARK
Preempted frame analysis
PN Switch 1
PN Switch 2
PN Switch 3
IO-device (right)
TAP3
Siemens BANY XM400
Best-Effort netload generator
(0-100%)
CH3
CH4
Best-Effort
PROFINET
PROFINET +
Best-Effort

Signal transfer application

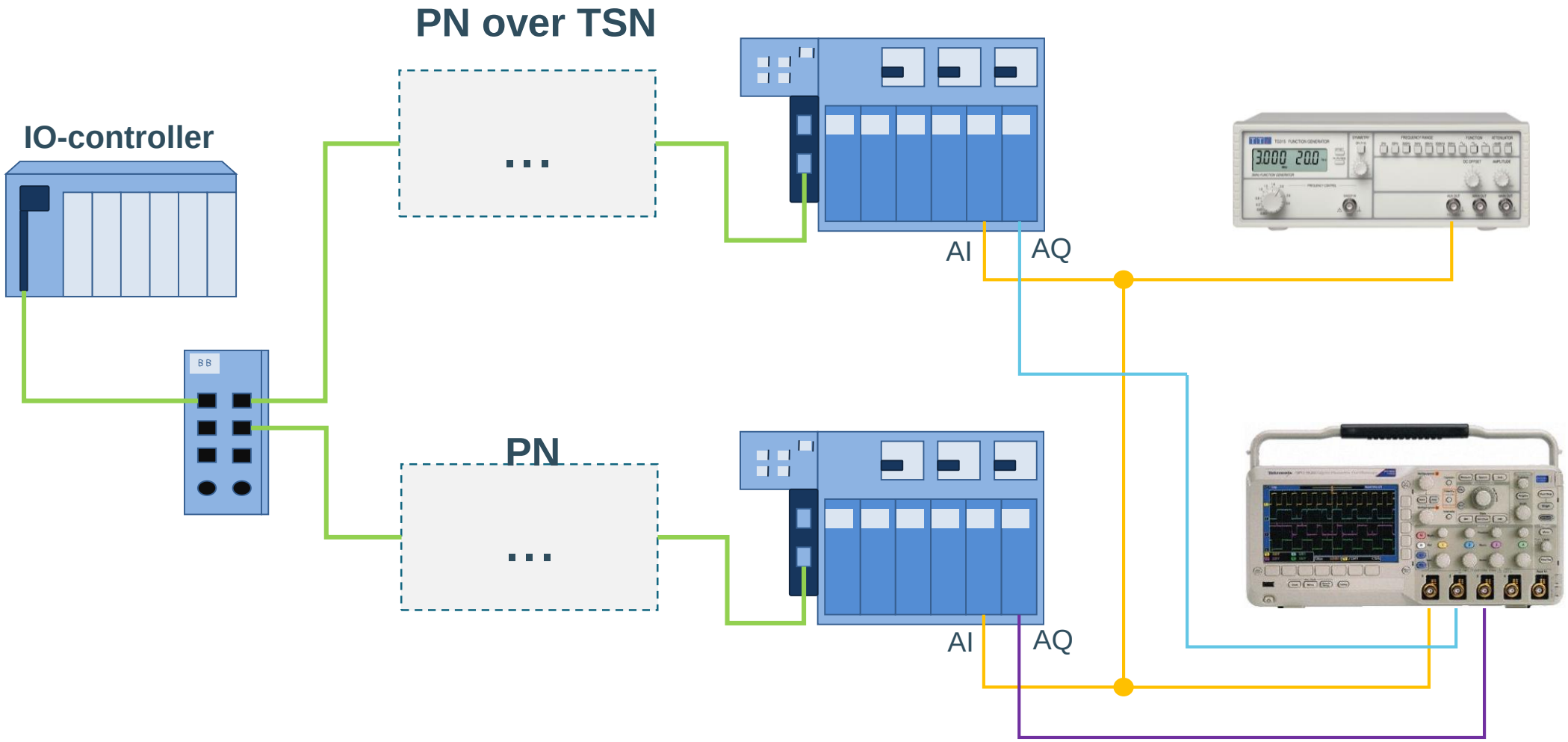

End-to-end delay analysis method

- Active TAP introduces latency (remove for end-to-end delay measurements)
- .pcap measurements with netANALYZER
  - 100BASE-TX
  - Accuracy: ± 5, resolution 1 ns
- Automated analysis in MATLAB
  - Plotting captured frames of multiple TAPs in time domain
  - End-to-end delay analysis
  - Active TAP delay correction not yet implemented
- Same measurement principle for forwarding delay

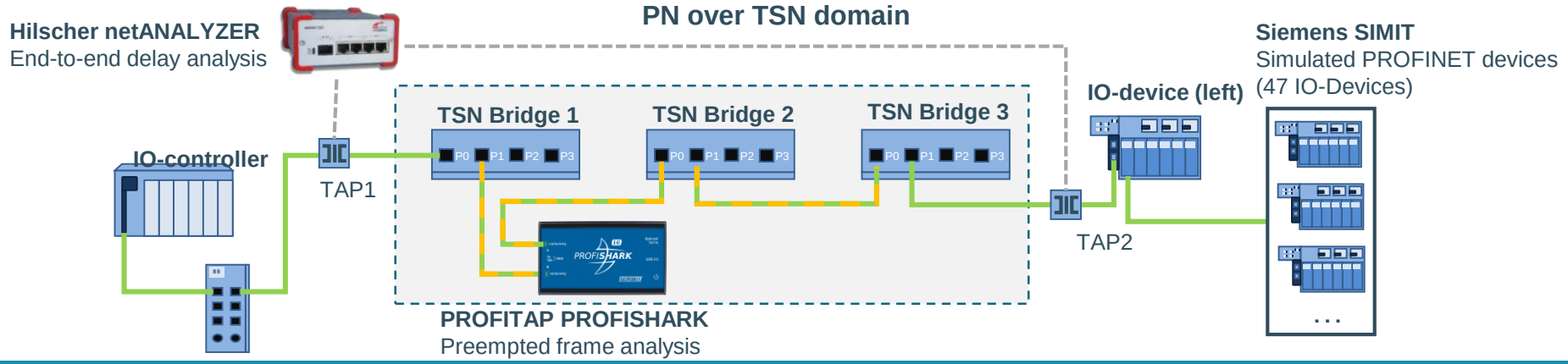

Frame preemption analysis

- Preemption changes the preamble and SFD field in the Ethernet frame
- Most capturing devices don’t recognize preempted frames
  - Dedicated hardware required → PROFISHARK

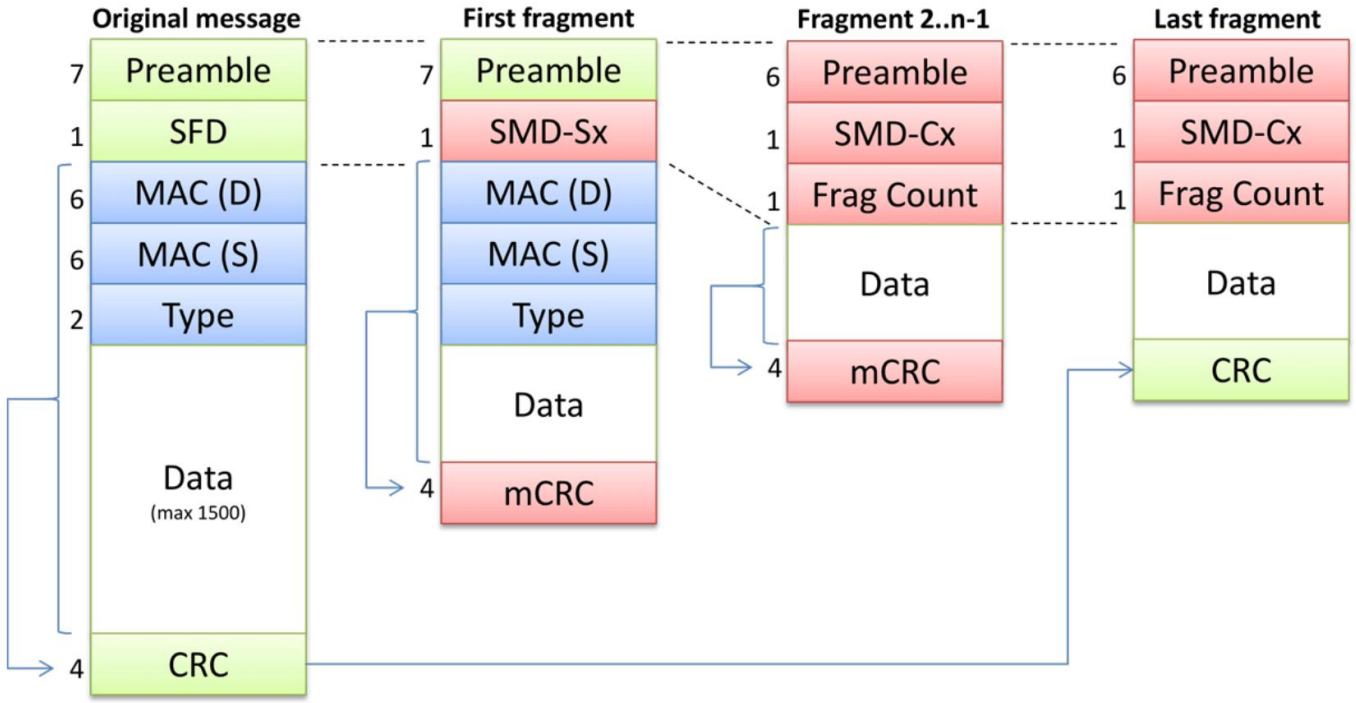

IEB – basics of ethernet frame preemption

Frame preemption analysis
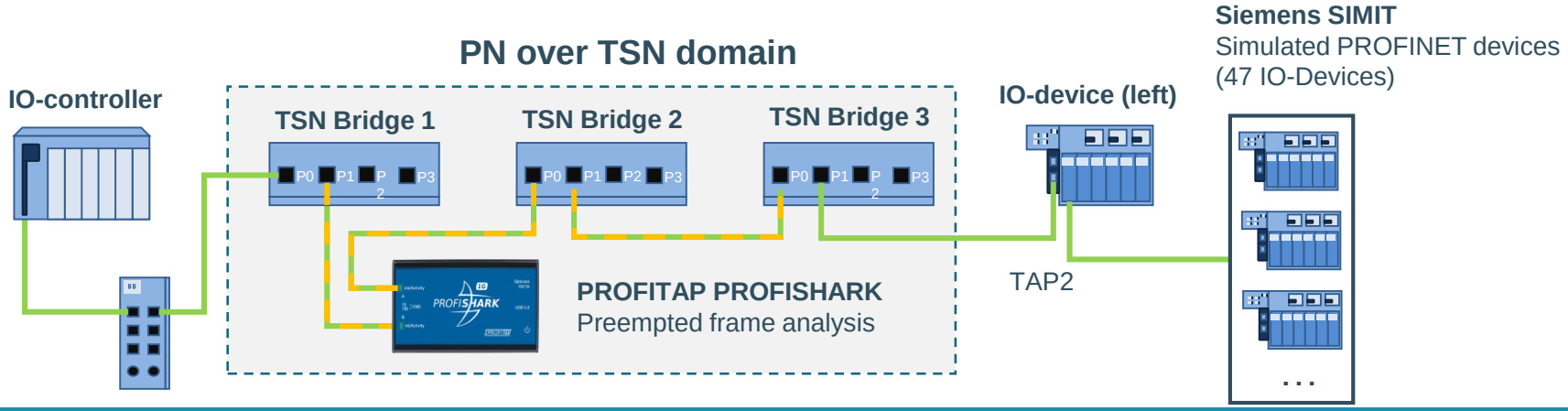
67	0.000761616	3	20:30:40:50:60:80	10:20:30:40:50:70	84	FPP	[Initial fragment: SMD-S0]
77	0.000811536	3			812	FPP	[Continuation fragment: SMD-C0] [#0]
80	0.000884496	3			654	FPP	[Continuation fragment: SMD-C0] [#1]
83	0.000966656	3	20:30:40:50:60:80	10:20:30:40:50:70	268	FPP	[Initial fragment: SMD-S1]
87	*REF*	3	20:30:40:50:60:80	10:20:30:40:50:70	76	ARP	Who has 0.0.171.116? Tell 0.0.0.0
96	0.000056240	3			76	FPP	[Continuation fragment: SMD-C1] [#1]
99	0.000077360	3			660	FPP	[Continuation fragment: SMD-C1] [#2]
101	0.000138160	3			494	FPP	[Continuation fragment: SMD-C1] [#3]
102	0.000196800	3	20:30:40:50:60:80	10:20:30:40:50:70	572	FPP	[Initial fragment: SMD-S2]
111	0.000250568	3			76	FPP	[Continuation fragment: SMD-C2] [#0]
119	0.000306888	3			902	FPP	[Continuation fragment: SMD-C2] [#1]
138	0.000608656	3	20:30:40:50:60:80	10:20:30:40:50:70	204	FPP	[Initial fragment: SMD-S3]
140	0.000632976	3	20:30:40:50:60:80	10:20:30:40:50:70	1334	ARP	Who has 0.0.171.116? Tell 0.0.0.0