Redundancy for Robustness: TSN .1CB

IEEE ETFA 2022 – WS10
“Enabling robust, converged networks for Industry 4.0”
06/09/2022 – Stuttgart (Germany)

Most recent version of the presentation

Arne Verhoeven (lecturer)
Dimitri De Schuyter
Mathieu Troch
Philippe Saey

Outline

- Introduction
- Types of redundancy
  - MRP – Media Redundancy Protocol
  - PRP – Parallel Redundancy Protocol
  - HSR – Highway Seamless Redundancy
  - 802.1CB FRER – Frame Replication and Elimination for Reliability (TSN networks)
- Conclusion

Outline

- **Introduction**
- Types of redundancy
  - MRP
  - PRP
  - HSR
  - FRER
- Conclusion

Introduction

What happens when a PROFINET link is interrupted?

- PN communication fails → devices go to the fail-safe state.
- Fail-safe halts industrial process in a safe manner during failures→ production halted
- The time between PN failure and fail-safe state is configurable (watch dog time)

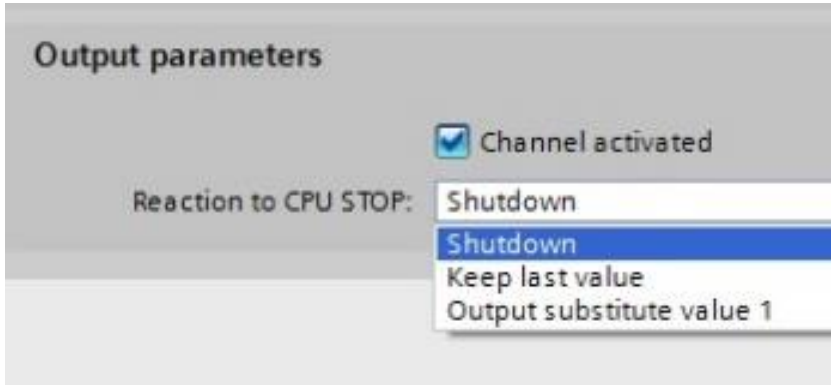

When PROFINET communication stops…

What if we want to avoid fail-safe state because of physical layer errors?

→ Create multiple physical communication paths

→ **Network redundancy**

Outline

- Introduction
- Types of redundancy
  - **MRP**
  - PRP
  - HSR
  - FRER
- Conclusion

MRP

Media Redundancy Protocol

MRP: Media Redundancy Protocol

- **Not seamless!**
  - Network recovery time* < 200 ms
  - Usually network recovery time ≥ watch dog time
    - **Fail-safe state!**
  - PROFINET communication can take a lot longer to start up (reinstate recovery time)!
- Supported by most PROFINET devices
- 1 Redundancy Manager (MRM)
- Multiple Redundancy Clients (MRC)

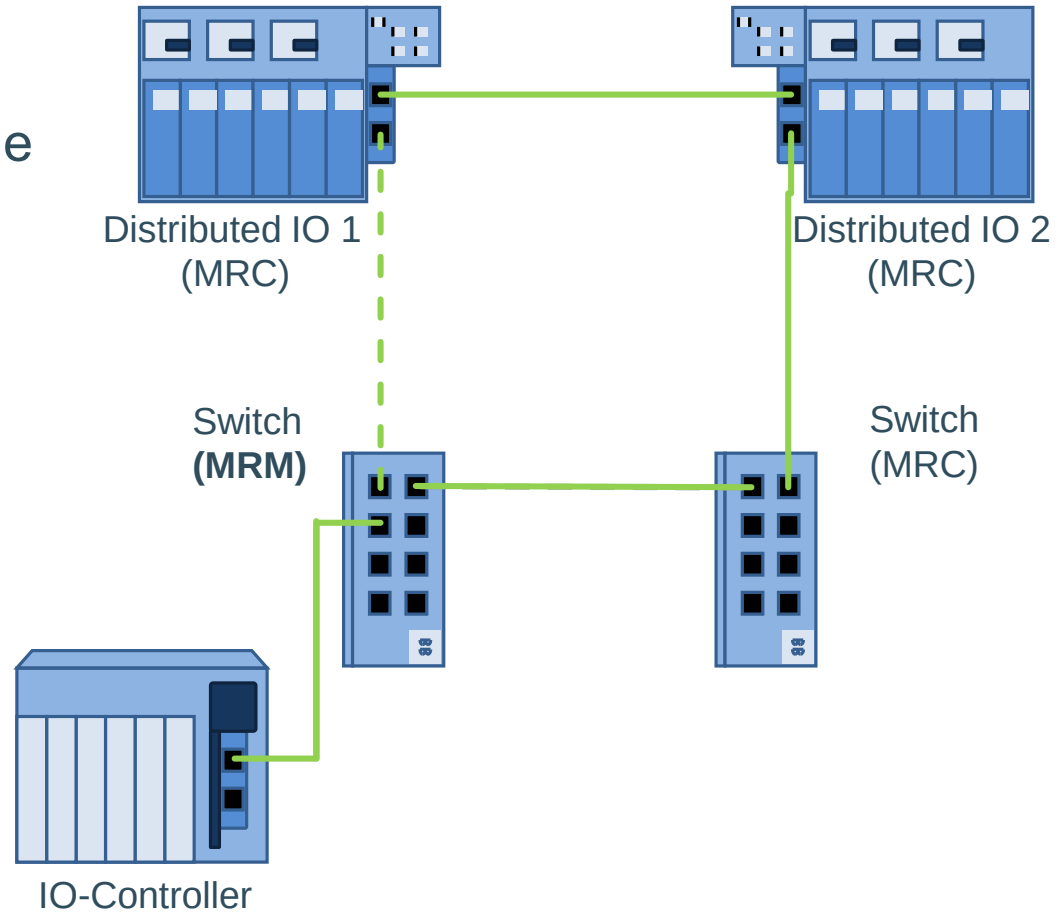

*Network Recovery time: the time between network failure and working network (after which the PROFINET communication can start up again)

MRP: Media Redundancy Protocol

- **MRP Advantages**
  - Integrated in most PROFINET devices
  - Easy integration in PROFINET engineering tools

- **MRP Disadvantages**
  - Not seamless!
  - Network recovery and reinstate time dependent on network topology and configuration

Outline

- Introduction
- Types of redundancy
  - MRP
  - **PRP**
  - HSR
  - FRER
- Conclusion

PRP

Parallel Redundancy Protocol

PRP: Parallel Redundancy Protocol

- Seamless redundancy
  - PN application does not notice a single link failure
- Line, star, tree
- Two physically separated LANs
- Messages sent on both LANs

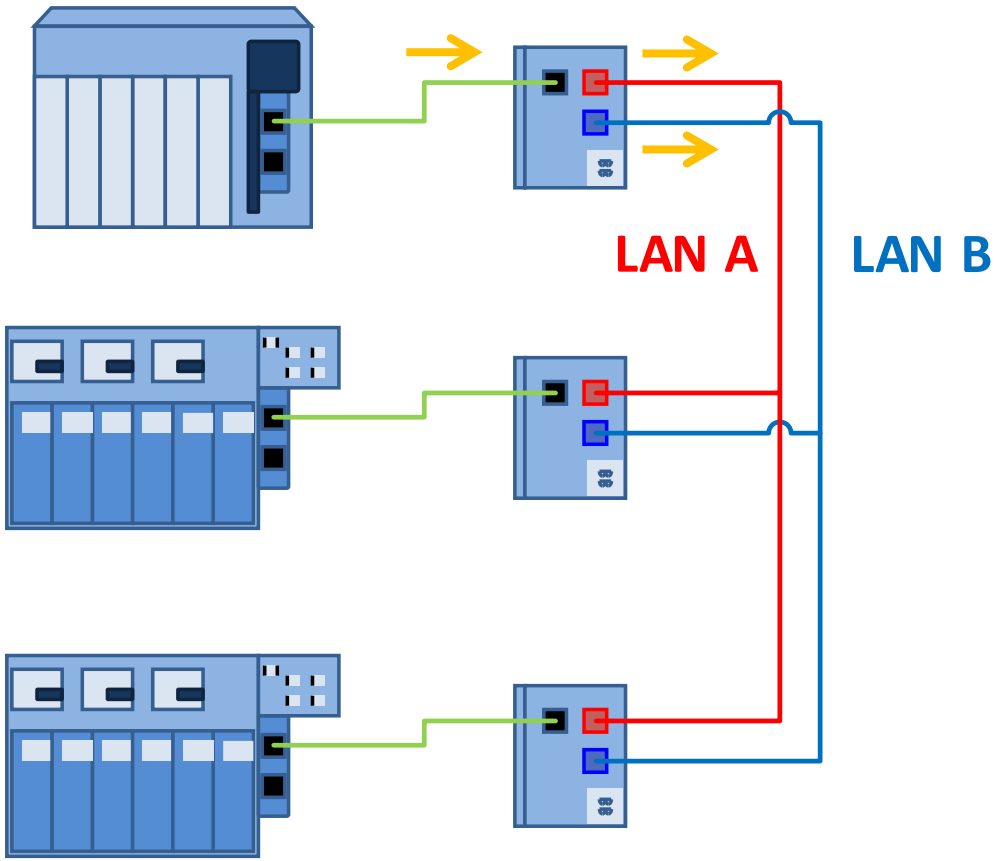

PRP: Parallel Redundancy Protocol

Changes to the message format

- 6-byte redundancy control trailer added

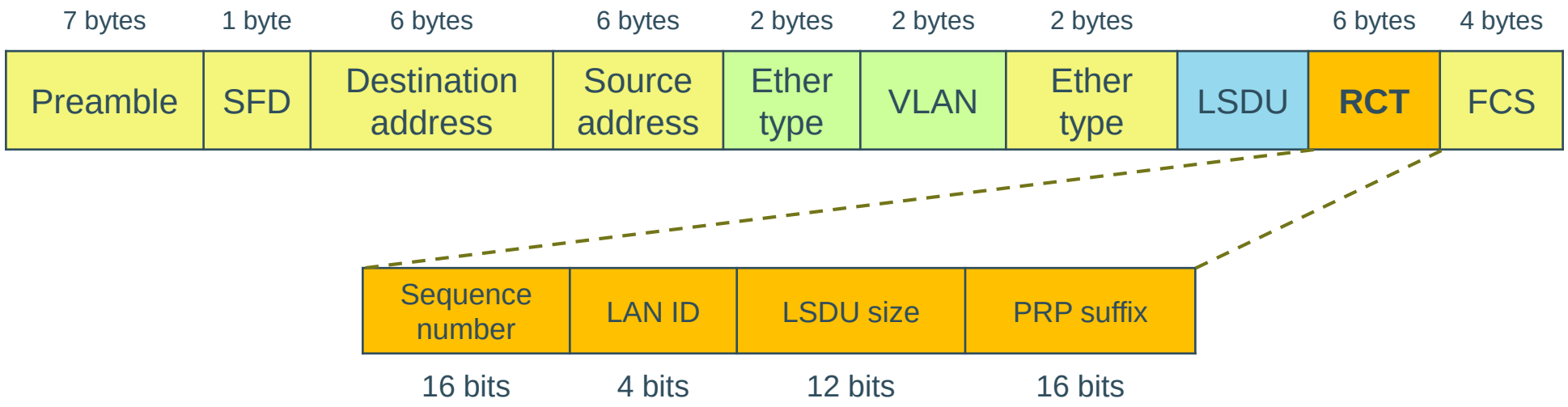

Outline

- Introduction
- Types of redundancy
  - MRP
  - PRP
  - **HSR**
  - FRER
- Conclusion

HSR

High-availability Seamless Redundancy

HSR: High-availability Seamless Redundancy

- HSR creates a ring of HSR switches
- Messages sent in both directions of the ring, first arrived message is used
- Seamless redundancy

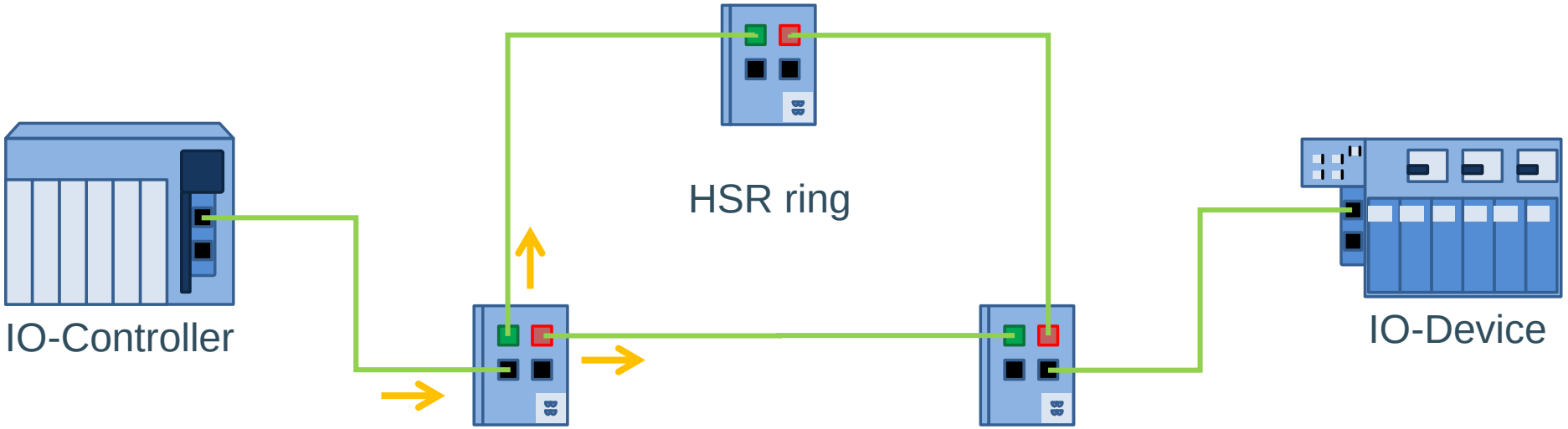

HSR: High-availability Seamless Redundancy

Changes to the message format

- 6-byte redundancy control trailer added

Ethertype and HSR header are added at the beginning of the message: 6 bytes

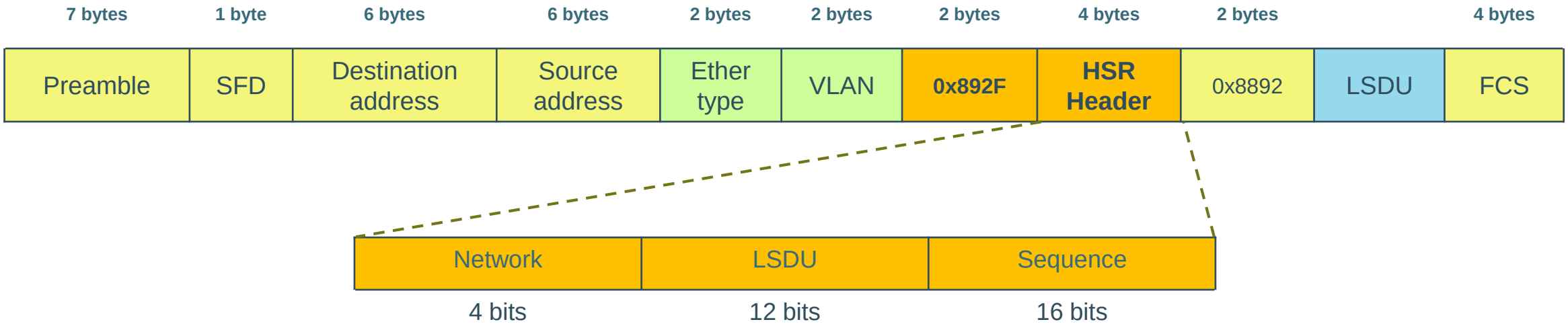

PRP and HSR

- Advantages of PRP and HSR
  - Seamless redundancy → PROFINET network not disturbed in case of single link failure
  - Plug and play, no configuration

- Disadvantages of PRP and HSR
  - Specific hardware required
  - Not integrated in PROFINET engineering tool

Outline

- Introduction
- Types of redundancy
  - MRP
  - PRP
  - HSR
  - **FRER**
- Conclusion

FRER

802.1CB Frame Replication and Elimination for Reliability

FRER – Introduction

- Seamless redundancy
- Complex topologies
  - Line, star, tree, ring, combination
- Defined in 802.1CB
- Integrated in TSN devices

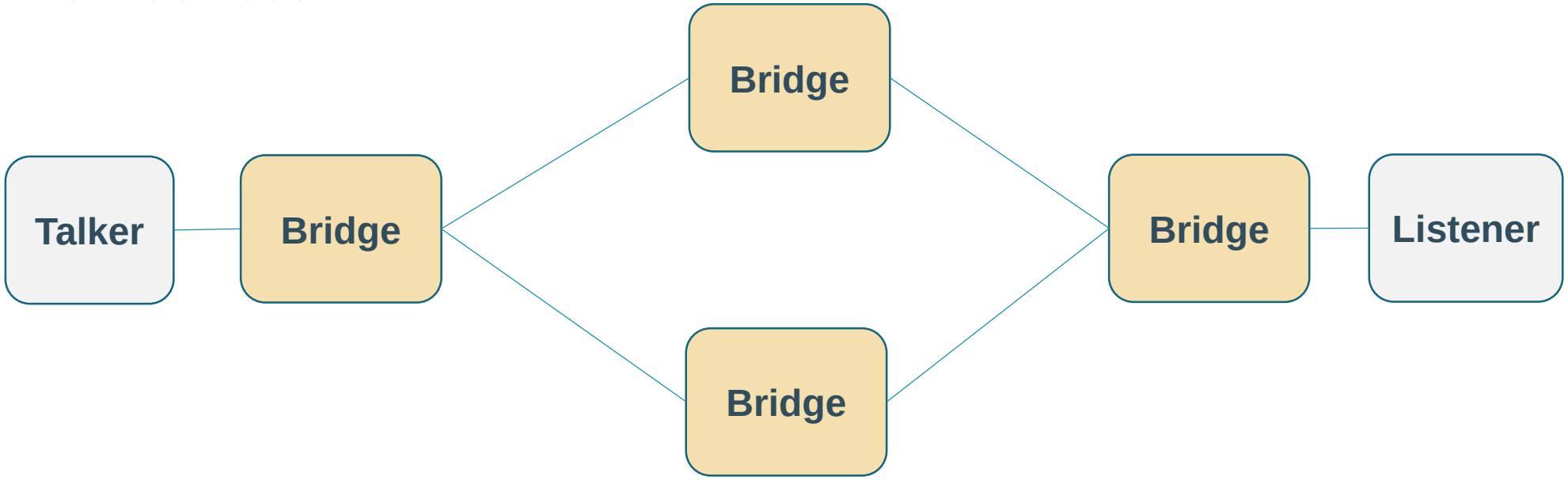

FRER – Topology and definitions

- **Stream**
  - Entity to which the Qualities of Service (QoS) are offered. It is a sequence of packets, either unicast or multicast, from a talker to one or more listeners (802.1CB)
  - 1 source → **Talker**
  - 1 or more sinks → **Listener**
- **Compound stream** → stream between talker and listener over a disjointed path
  - Consists of 1 or more **member streams**
  - Duplicate frames exists
- **Member stream** → Stream over a single path

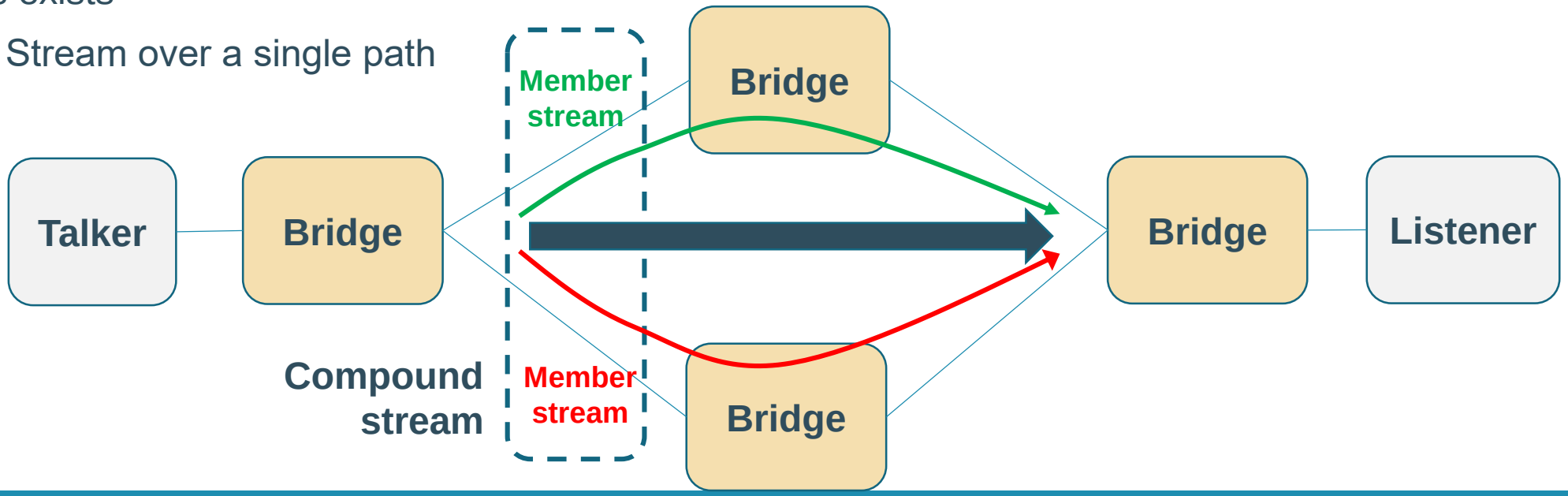

FRER – Topology and definitions

- Proxy port → Border of FRER domain
  - Redundancy tags added or removed
- Identification of TSN member streams is required → Sequence encoding and decoding
  - Packet replication and elimination to and from multiple member streams
- Recovery algorithms for eliminating duplicates are defined in 802.1CB
  - (not the case for PRP and HSR)

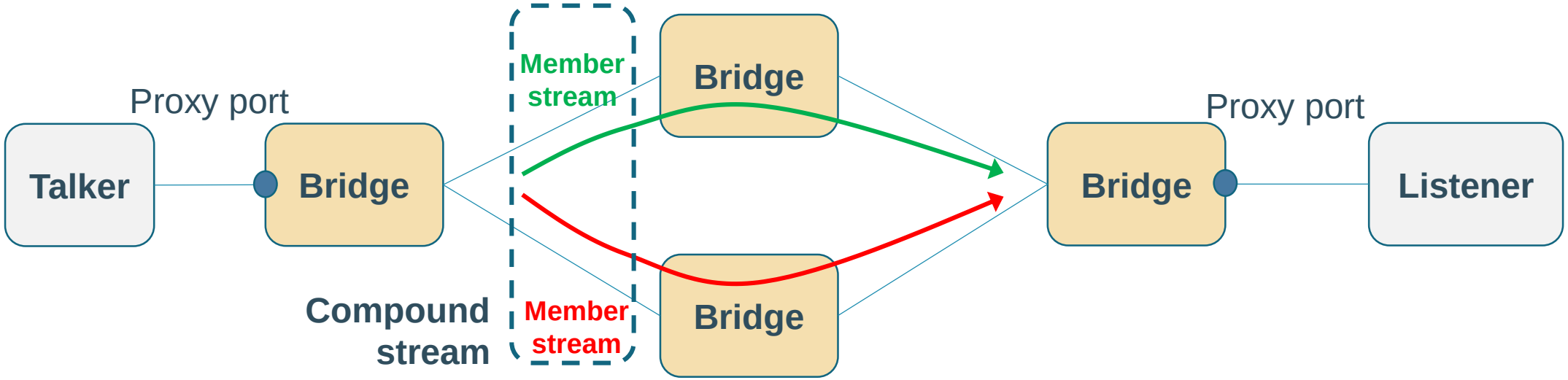

FRER – Topology and definitions

- FRER allows for more complex topologies than HSR and PRP
  - More than 2 redundant paths possible
  - But… increased complexity

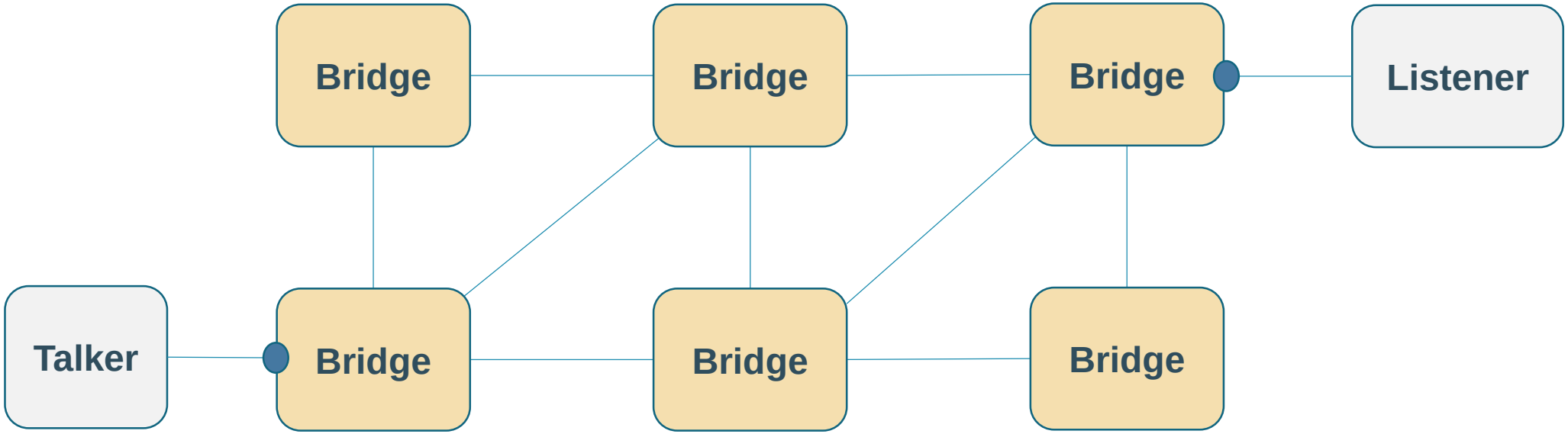

FRER – Changes to the message format

- 6 bytes redundancy tag (R-tag) added to every frame in FRER domain

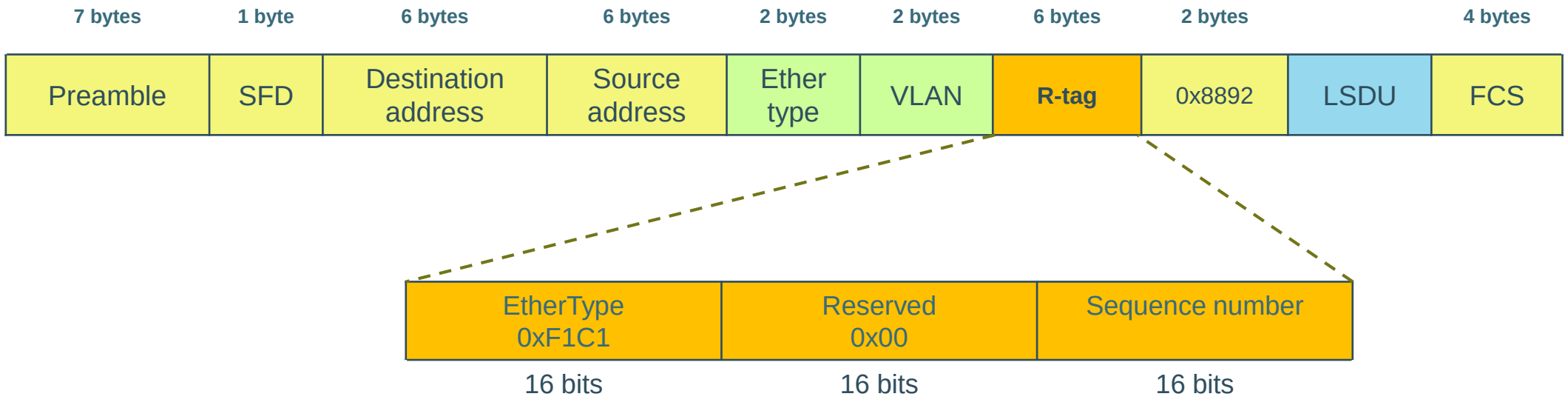

Outline

- Introduction
- Types of redundancy
  - MRP
  - PRP
  - HSR
- **Conclusion**

Conclusion

Conclusion

- MRP provides a redundancy option integrated in most PN devices
  - Usefull if a failover times in order of seconds are allowed

- PRP and HSR provide seamless redundancy for existing PN networks
  - Specific hardware required

- 802.1CB FRER provides seamless redundancy for TSN networks
  - Flexible topologies
  - Integrated in TSN devices → no specific hardware required

Type of Redundancy (For industrial automation)	MRP	PRP	HSR	FRER
	Media Redundancy Protocol	Parallel Redundancy Protocol	High-Availibility Seamless Redundancy	Frame replication and elimination for reliability
Network topology	Ring	Line, Star, Tree	Ring	Line, star, tree ring
Typical application	Industrial IT, Process Automation, Building Automation	Factory Automation at IO-Device level, Automation in ships, energy switch gear, tunnels, power generation and distribution, etc.		TSN networks
Specific hardware needed?	No, included in most	Yes	Yes	Yes, TSN hardware that includes 802.1CB
Network recovery time (Datasheet)	200 ms (typical, depends on #devices)	0 ms	0 ms	0 ms
Network recovery time (measured, 4 devices)	60 ms	0 ms	0 ms	0 ms
Reinstate recovery time (Without Fast start-up ("FSU") measured)	± 3.5 s for ET200S	0 ms	0 ms	0 ms
Reinstate recovery time (With Fast start-up ("FSU") measured)	± 460 ms for ET200S	0 ms	0 ms	0 ms
Latency introduced by network components of the redundant ring (100BASE-TX)	Typically ± 3 µs + packet duration (typical PROFINET packet is 6,7 µs)	Typically ± 3 µs + packet duration (typical PROFINET packet is 6,7 µs)	From outside the ring into the ring: Typically ± 9 µs + packet duration (typicall PROFINET packet is 6,7 µs) Between ring components: Typically: ± 10 µs (cut-through)	Typically ± 3 µs + packet duration (typical PROFINET packet is 6,7 µs), delay of a store-and-forward switch
Pros	• Implemented in most Class B devices • Cost effective • Only 1 extra line segment needed	• Seamless • Typically "plug and play" • Only a part of the network can be duplicated	• Seamless • Typically "plug and play" • Bytes in header allow faster discard	• Seamless • Integrated in "standard" TSN devices (no specific hardware requirements
Cons	• Not seamless • Ring required • Configuration mandatory	• Extra hardware needed • Extra 6 bytes added as trailer • Not integrated in PROFINET engineering tool	• Extra HSR switches needed • Extra 6 bytes added • Not integrated in PROFINET engineering tool	• Extra 6 bytes added • Not plug-and-play • Configuration required