TSN performance assessment in brownfield PROFINET implementations

IEEE ETFA 2022 – WS10
“Enabling robust, converged networks for Industry 4.0”
06/09/2022 – Stuttgart (Germany)

Most recent version of the presentation

Arne Verhoeven (lecturer)
Dimitri De Schuyter
Mathieu Troch
Philippe Saey

Outline

- Introduction
- Brownfield PROFINET RT over TSN – principles
- Test network: topology and configuration
- Performance evaluation
  - PROFINET RT
  - Brownfield PROFINET RT over TSN
- Conclusion

- **Introduction**
- Brownfield PROFINET RT over TSN – principles
- Test network: topology and configuration
- Performance evaluation
  - PROFINET RT
  - Brownfield PROFINET RT over TSN
- Conclusion

Introduction

Introduction

- TSN is being adopted in Industrial Ethernet networks e.g.,
  - PROFINET (PN) V2.4
  - IEC 60802 TSN profile for Industrial automation
  - …
- TSN allows for
  - Deterministic message exchange
  - Convergent Operational Technology (OT) and Information Technology (IT) networks
- … Millions of PN nodes already in the field!
- Can we implement TSN features on current PN networks?

  → **Brownfield PN over TSN network**

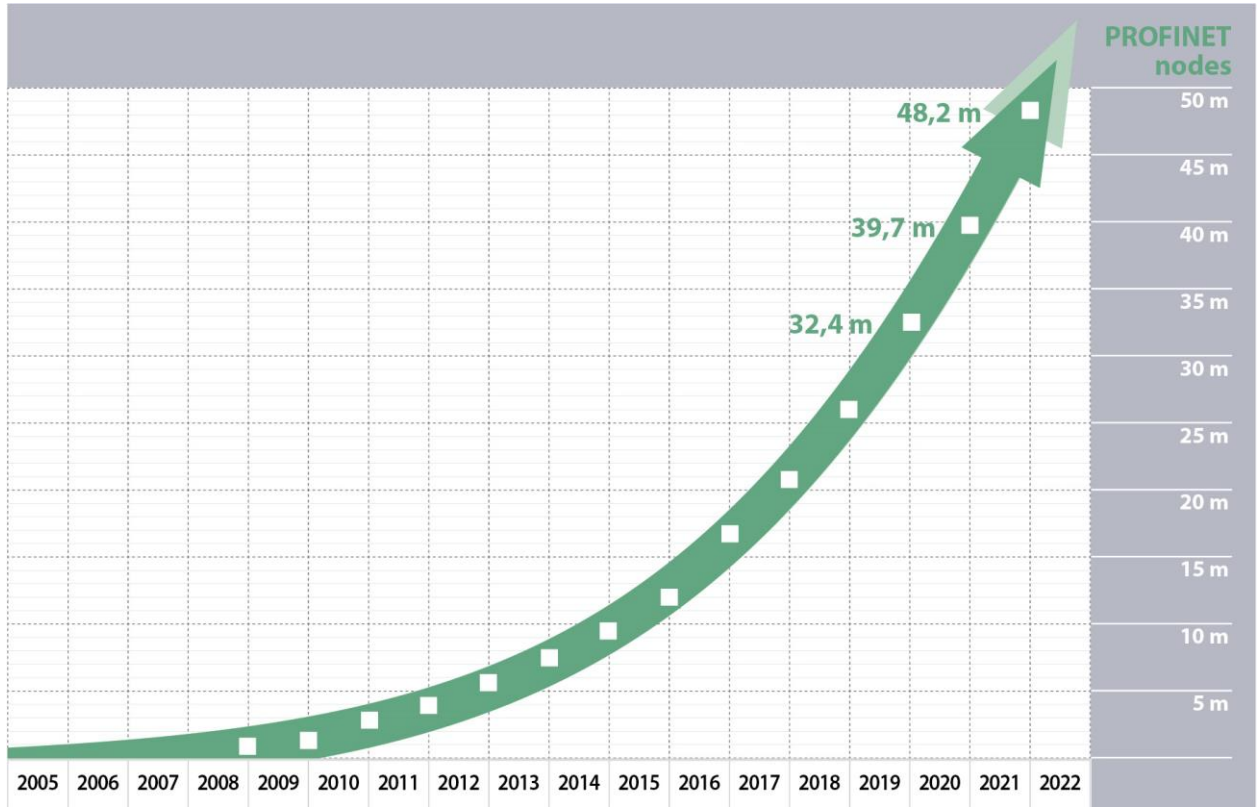

Introduction

*Not discussed here

- This research is focused on **PROFINET RT**
  - However, results also valid for other types of Real-Time traffic!
  - E.g., OPC UA pubsub

- Brownfield PN over TSN demonstrator with…
  - Industry-relevant PN network
  - TSN backbone
  - 100BASE-TX (100 Mbit/s) and 1000BASE-T (Gbit/s)

- TSN Backbone supports
  - 802.P - Quality of Service (= PROFINET RT)
  - 802.1AS – Synchronization
  - 802.1Qbv – Time Aware Shaper
  - 802.1Qbu + 802.3Qbr – Frame preemption
  - (802.1CB – Seamless redundancy)*

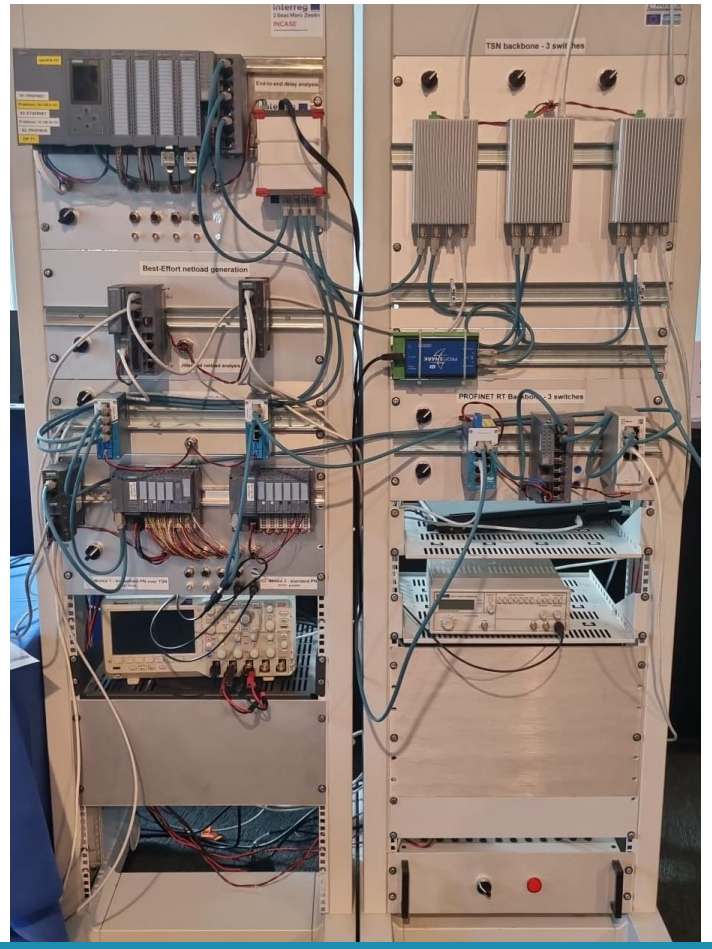

Research Questions

“Which TSN mechanisms ensures that PN traffic is protected against Best-Effort (BE) netload (bursts)?”

“What are the advantages of upgrading to Gbit/s Ethernet?

“How do TSN features such as Time Aware Shaper and preemption influence the end-to-end delay of PN frames?”

“What is the optimal TSN domain configuration for a brownfield PN over TSN network using Time Aware Shaping and preemption?”

Brownfield PROFINET RT over TSN – principles

- Introduction
- **Brownfield PROFINET RT over TSN – principles**
- Test network: topology and configuration
- Performance evaluation
  - PROFINET RT
  - Brownfield PROFINET RT over TSN
- Conclusion

Brownfield PROFINET over TSN network

- PN application “pipelined” over TSN domain

- TSN domain is not integrated in the PN engineering tool
  - TSN domain is invisible to PN application
  - PN and TSN clocks are not synchronized

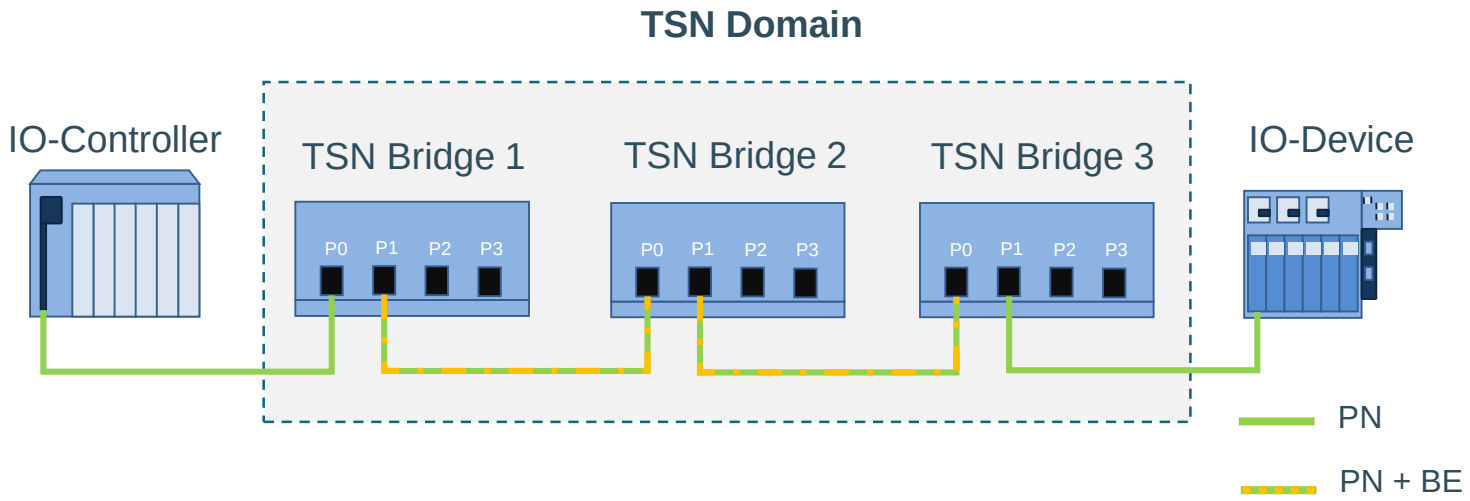

Test network: topology and configuration

- Introduction
- Brownfield PROFINET RT over TSN – principles
- **Test network: topology and configuration**
- Performance evaluation
  - PROFINET RT
  - Brownfield PROFINET RT over TSN
- Conclusion

Performance evaluation of brownfield PN over TSN

- **Industry relevant PN network**
  - 50 IO-Devices @ 1 ms → 35% PN netload
  - Industry standard send clock value = 1 ms
    - Relevant for all networks with update times ≥ 1 ms
- **OT/IT Convergence** → Injection of Best-Effort (BE) traffic
  - Artificial traffic generation
  - Strict control of netload and frame size
    - 35% BE Netload
    - 1538 bytes frame length (Incl. PRE, SFD, CRC, IPG)
- **Analysis**
  - End-to-end delay (TAP1 – TAP2)
  - See demonstration

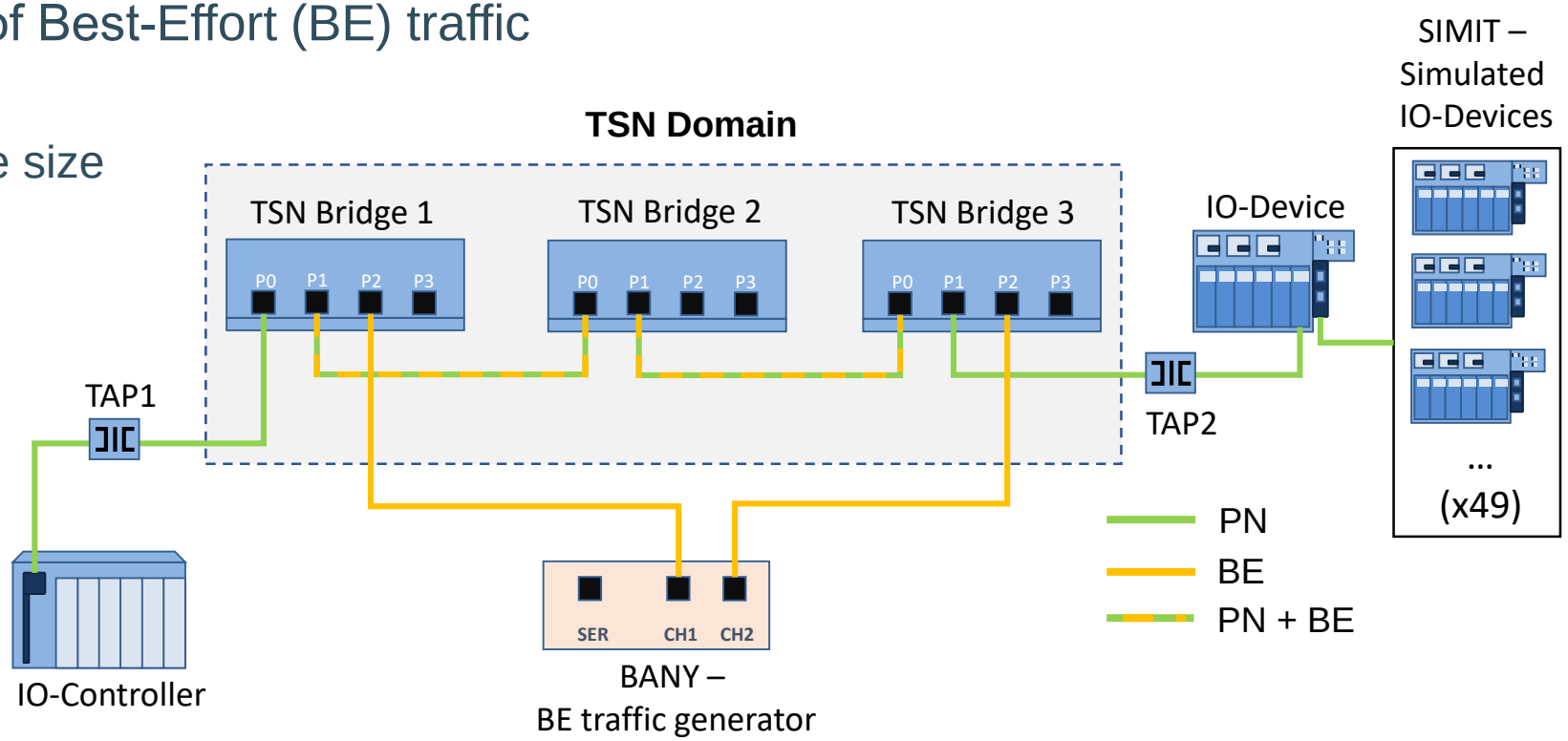

- Introduction
- Brownfield PROFINET RT over TSN – principles
- Test network: topology and configuration
- Performance evaluation
  - PROFINET RT
  - Brownfield PROFINET RT over TSN
- Conclusion

Performance evaluation

Analysis of a brownfield PN over TSN network

- End-to-end delay comparison of different network configurations
  - **Standard PN network – benchmark**
  - Brownfield PN over TSN
    - Time Aware Shaper
    - Preemption
    - Time Aware Shaper + preemption

Standard PN

- Line topology – **3 switches**
- 100BASE-TX
- BE traffic: 35% Netload, 1538 byte frame length
- **BE traffic greatly increases delay!**

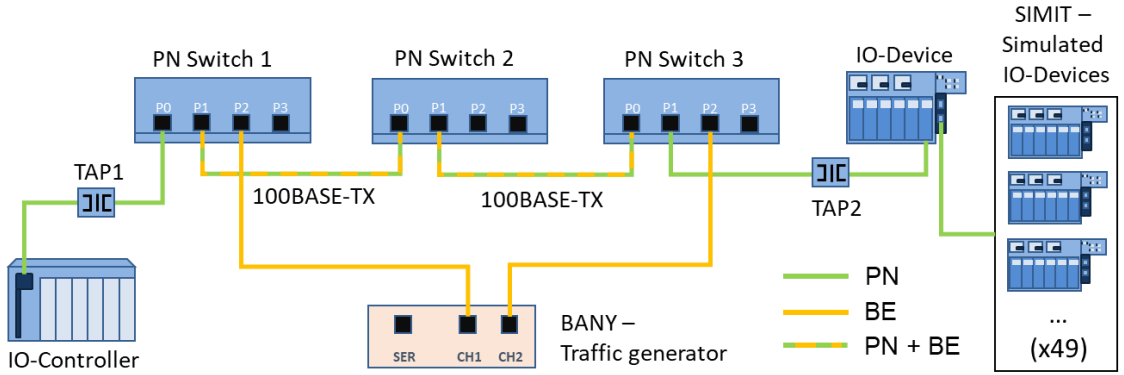

End-to-end delay - PN RT – without BE traffic

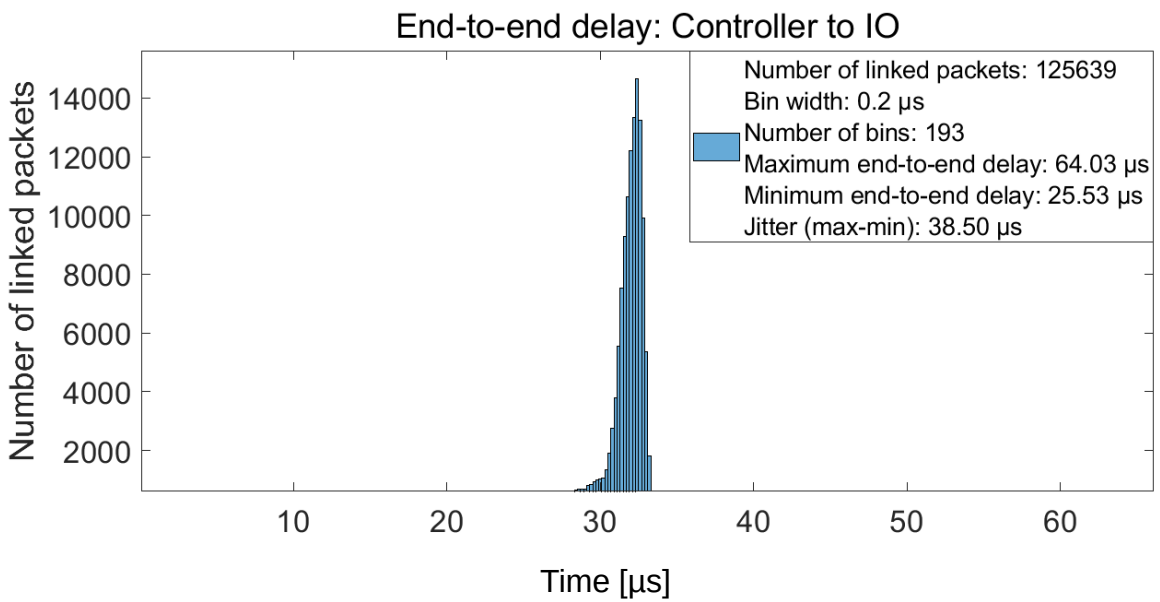

End-to-end delay - PN RT – with BE traffic

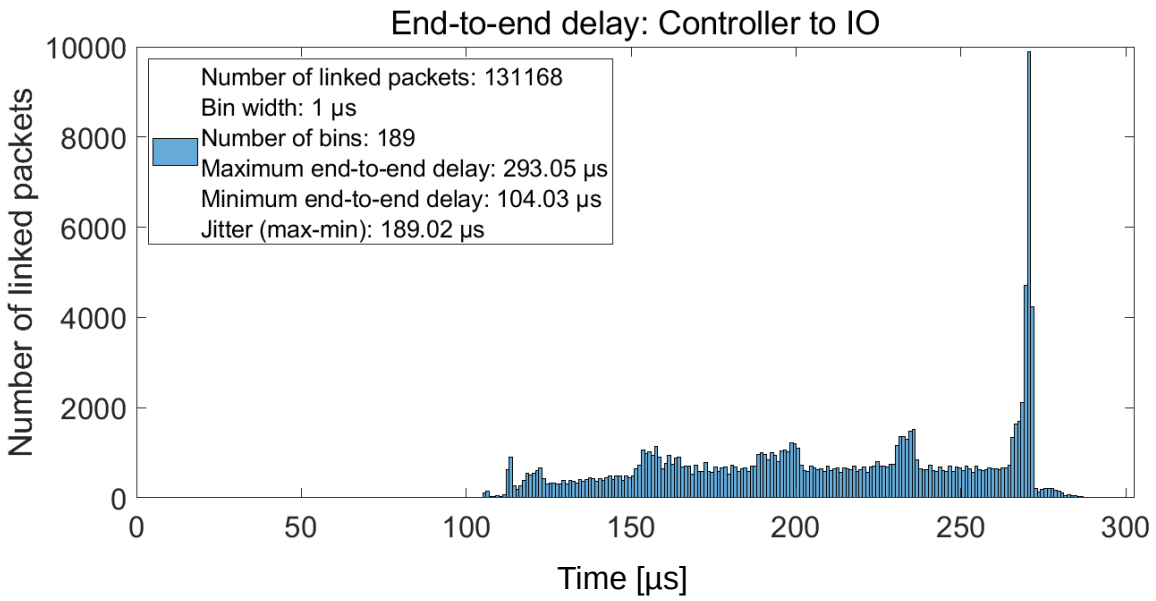

Standard PN

- Line topology – **6 switches**
- 100BASE-TX
- BE traffic: 35% Netload, 1538 byte frame length
- **BE traffic greatly reduces delay!**

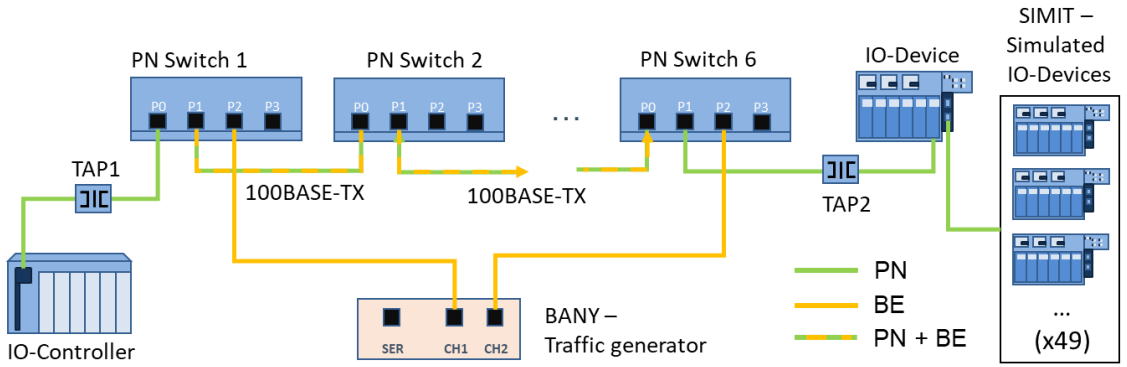

End-to-end delay - PN RT – without BE traffic

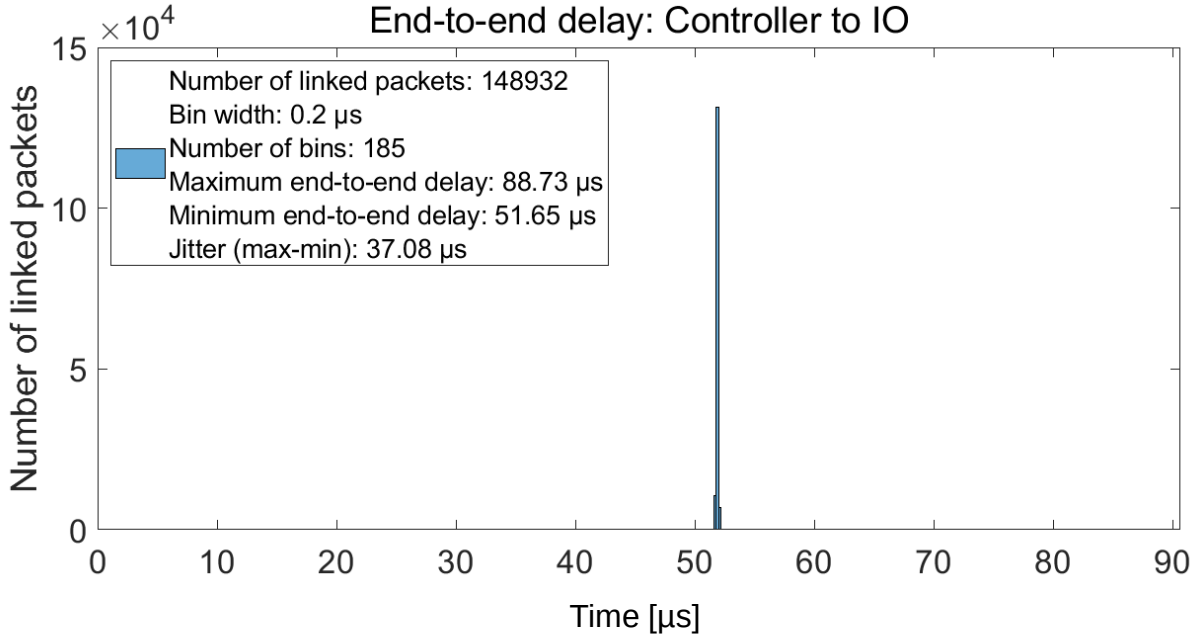

End-to-end delay - PN RT – with BE traffic

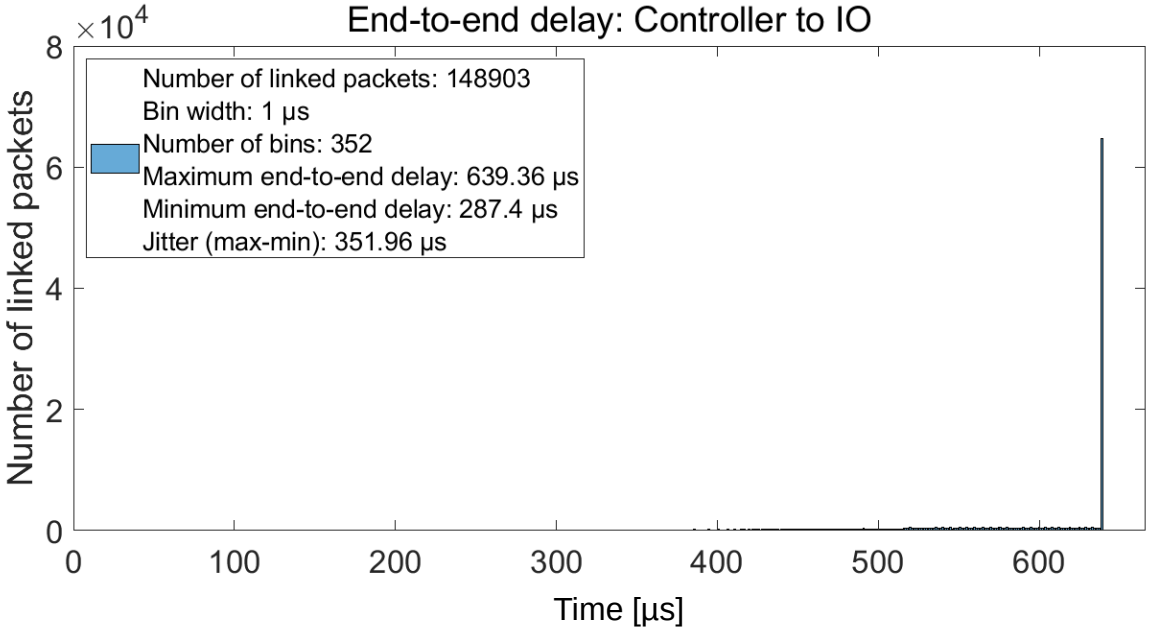

Standard PN

- Line topology – **3 switches**
- **1000BASE-T**
- BE traffic: 35% Netload (350 Mbit/s), 1538 byte frame length
- **BE traffic greatly reduces delay!**

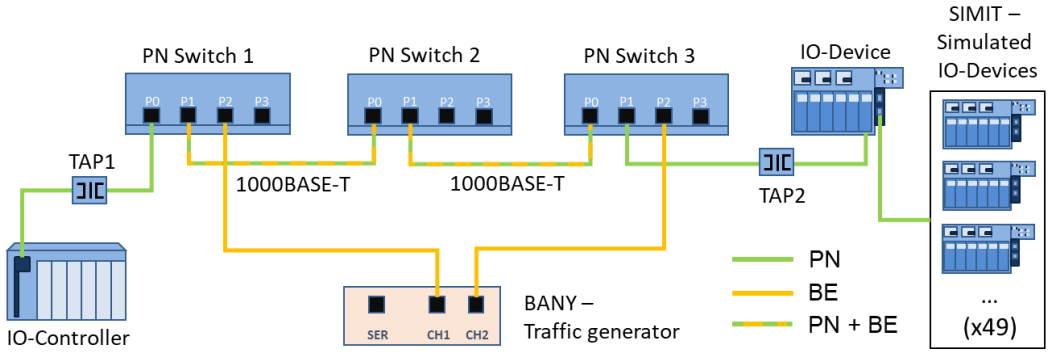

End-to-end delay - PN RT – without BE traffic

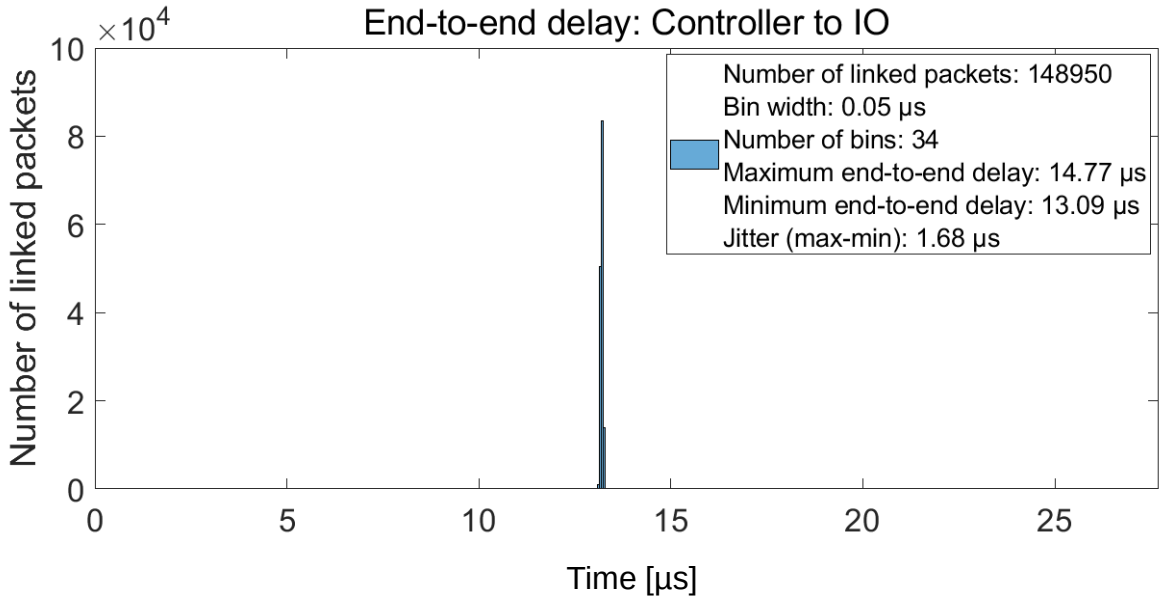

End-to-end delay - PN RT – with BE traffic

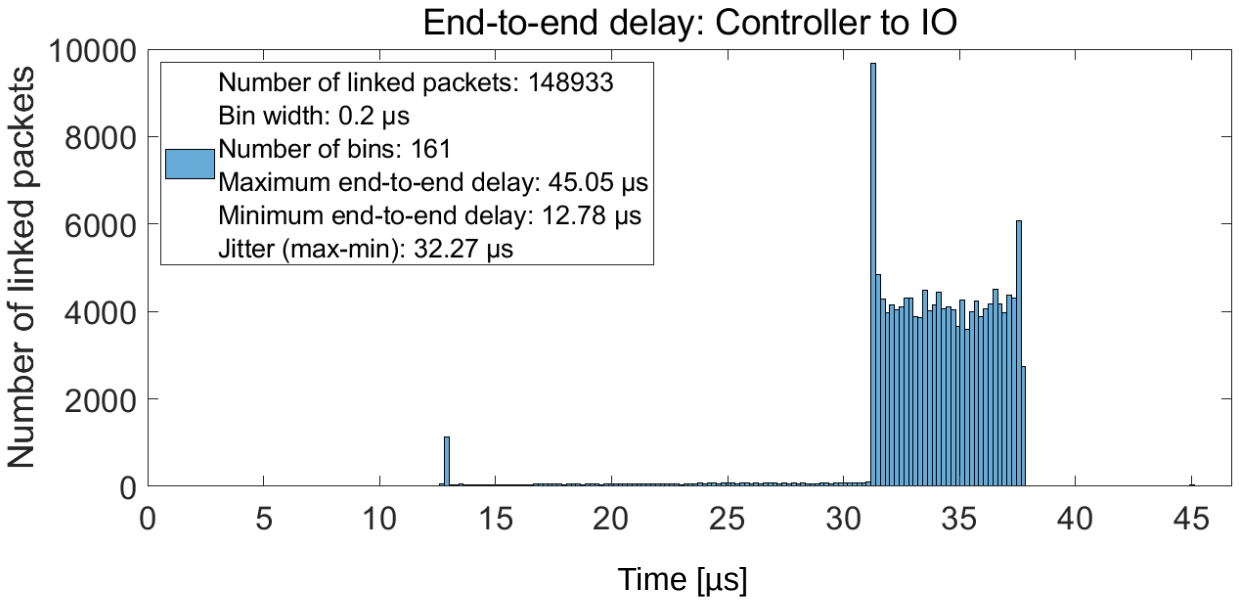

Standard PN

- Line topology – **6 switches**
- **1000BASE-T**
- BE traffic: 35% Netload (350 Mbit/s), 1538 byte frame length
- **BE traffic greatly reduces delay!**

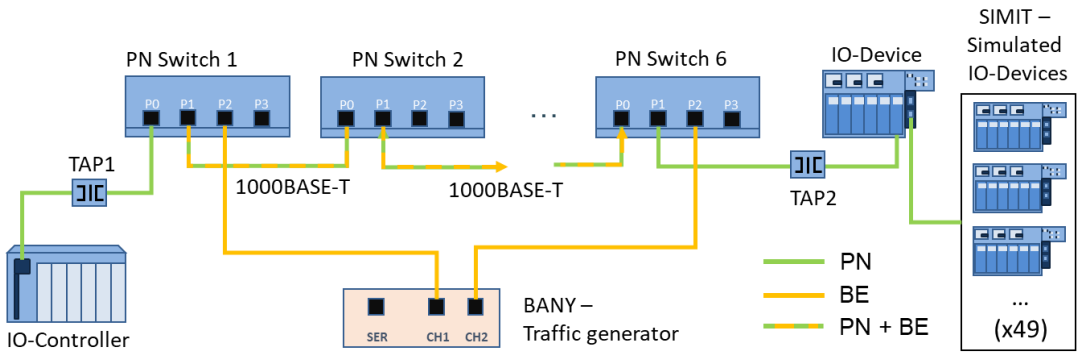

End-to-end delay - PN RT - without BE traffic

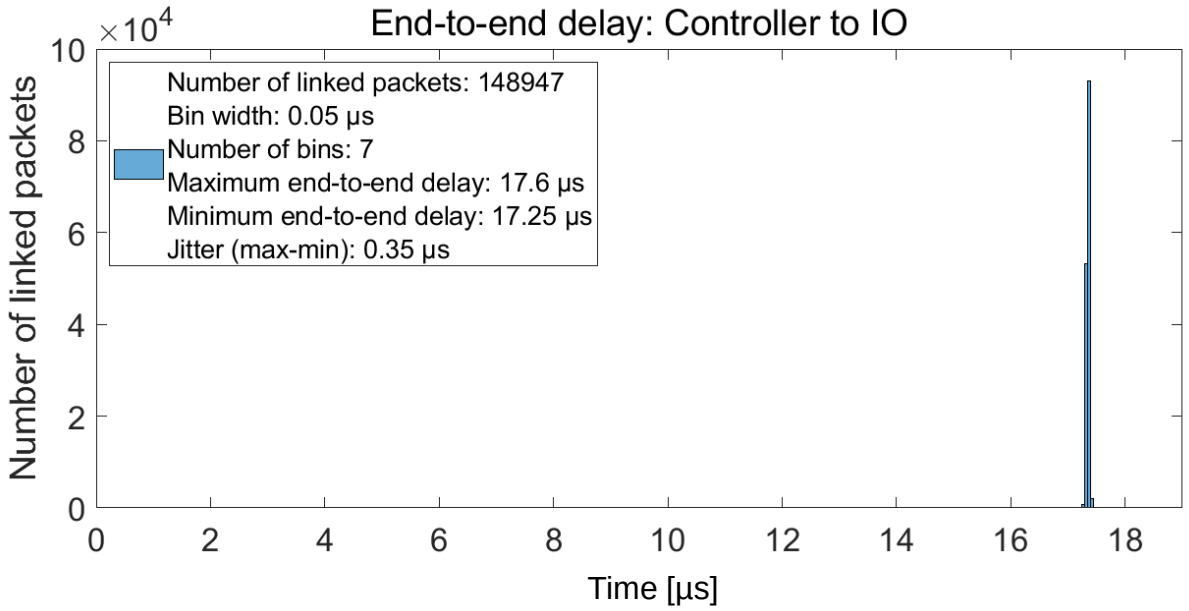

End-to-end delay - PN RT – with BE traffic

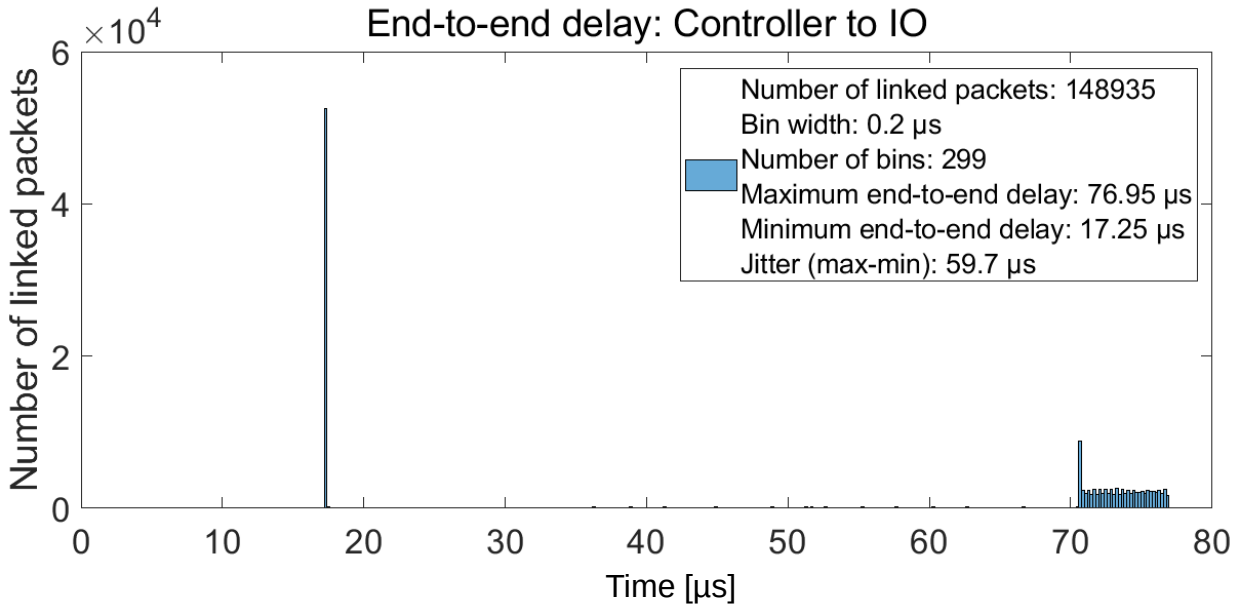

End-to-end delay in standard PN networks

- BE load delays PN frames
  - …Especially in larger networks!
  - Accumulated delay may not exceed update time
    - Frame gaps!
    - Line depth restrictions (PN Guideline)

Table 5-2: Maximum line depth with "Store and Forward" switches

Maximum line depth with update time of			
1 ms	**2 ms**	**4 ms**	**8 ms**
7	14	28	58

PN Commissioning Guideline

- Upgrading to 1000BASE-T?
  - End-to-end delay is reduced
  - But… delay still accumulates

Analysis of a brownfield PN over TSN network

- End-to-end delay comparison of different network configurations
  - Standard PN network – benchmark
  - **Brownfield PN over TSN**
    - **Time Aware Shaper**
    - Preemption
    - Time Aware Shaper + preemption

Time Aware Shaper – Configuration

- Brownfield PN over TSN → TSN and PN unsynchronized!
  - **RT Queue always active**
    - PN frames may always be transmitted
    - PN frames not delayed when no BE traffic exist

Time Aware Shaper – example

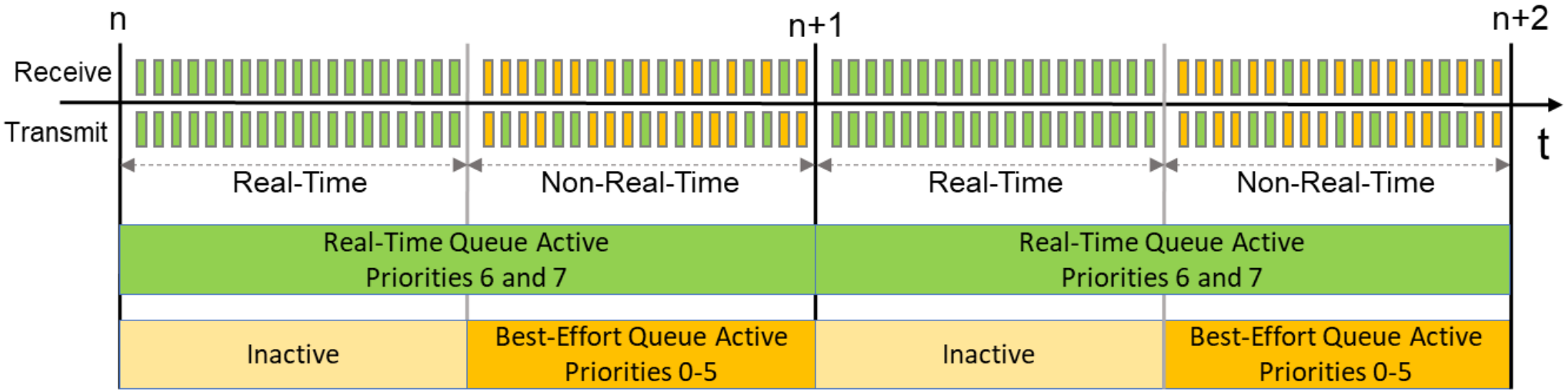

PN over TAS - Measurements

- 100BASE-TX
- TAS window size: 125 µs and 500 µs
- Max. end-to-end delay not reduced

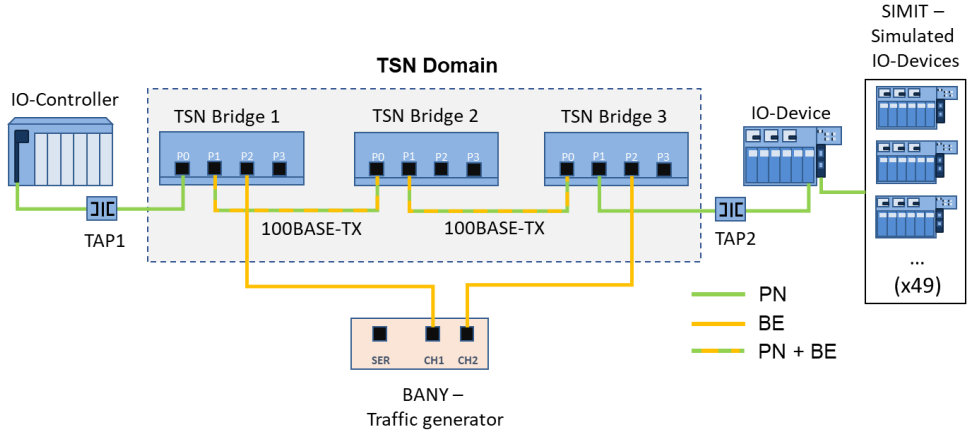

End-to-end delay – TAS window size 125 µs

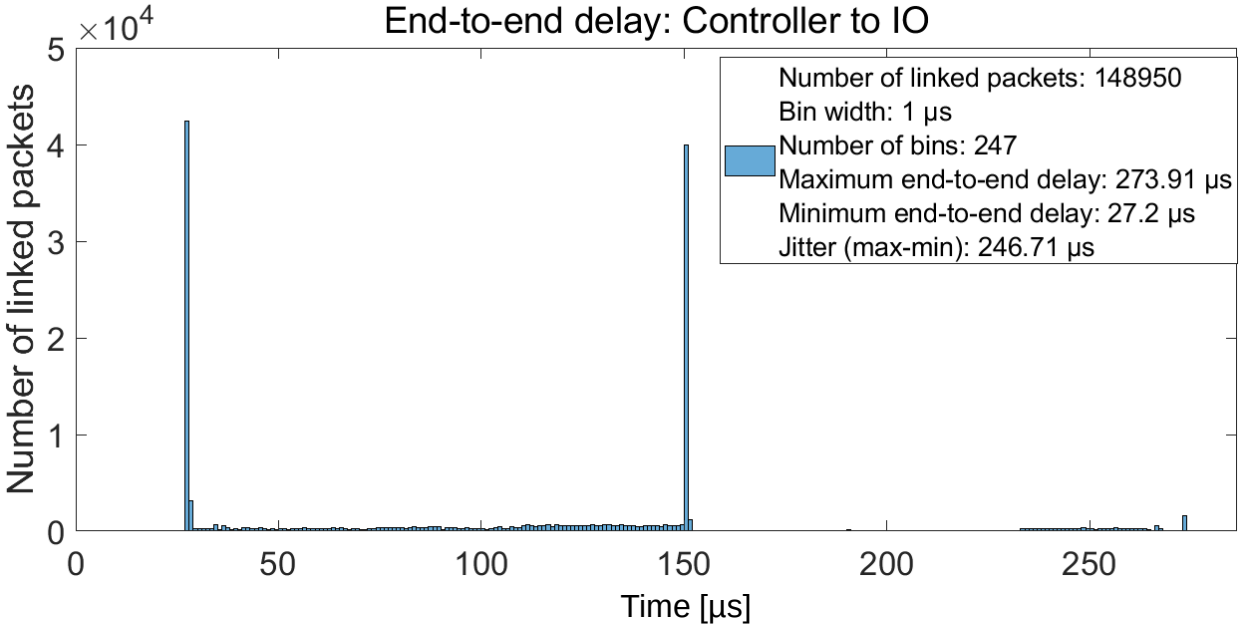

End-to-end delay – TAS window size 500 µs

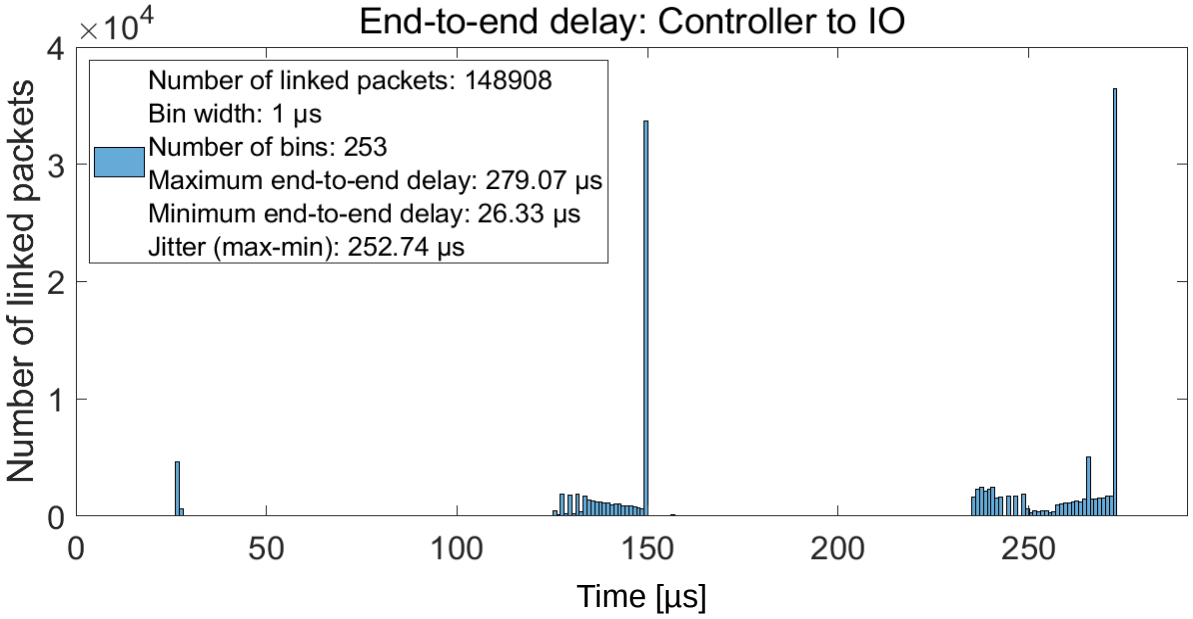

PN over TAS - Measurements

- 100BASE-TX
- TAS window size: 125 µs and 500 µs
- Max. end-to-end delay not reduced

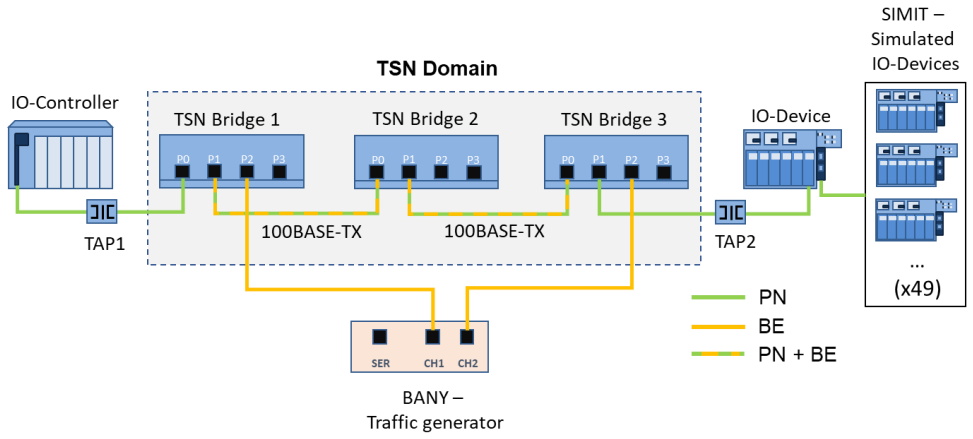

End-to-end delay – TAS window size 125 µs

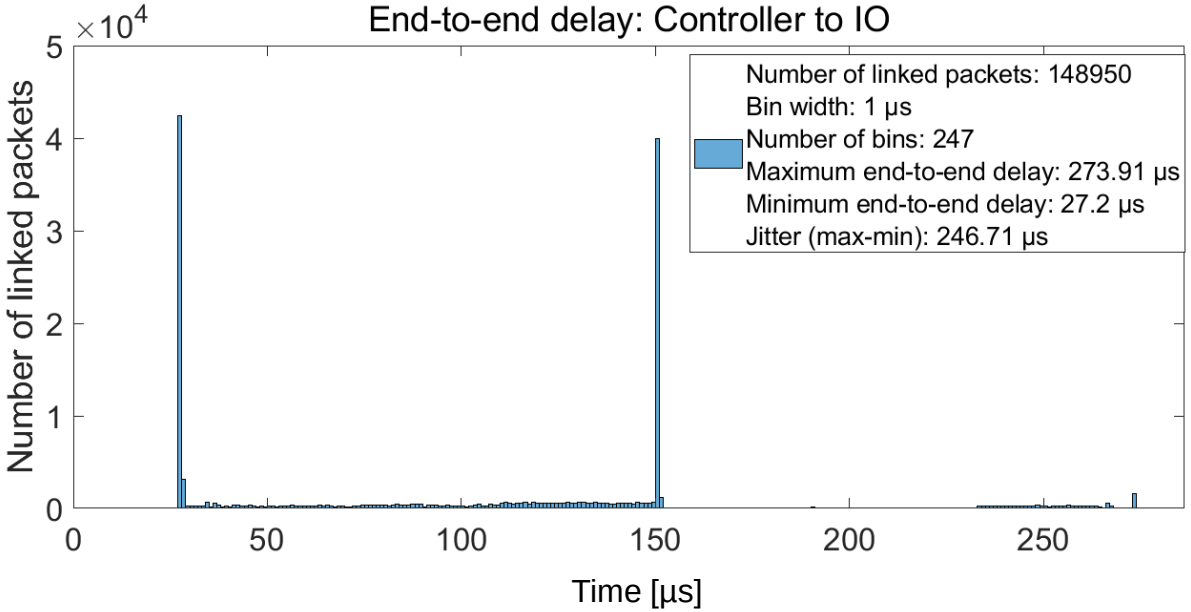

End-to-end delay - PN RT – with BE traffic

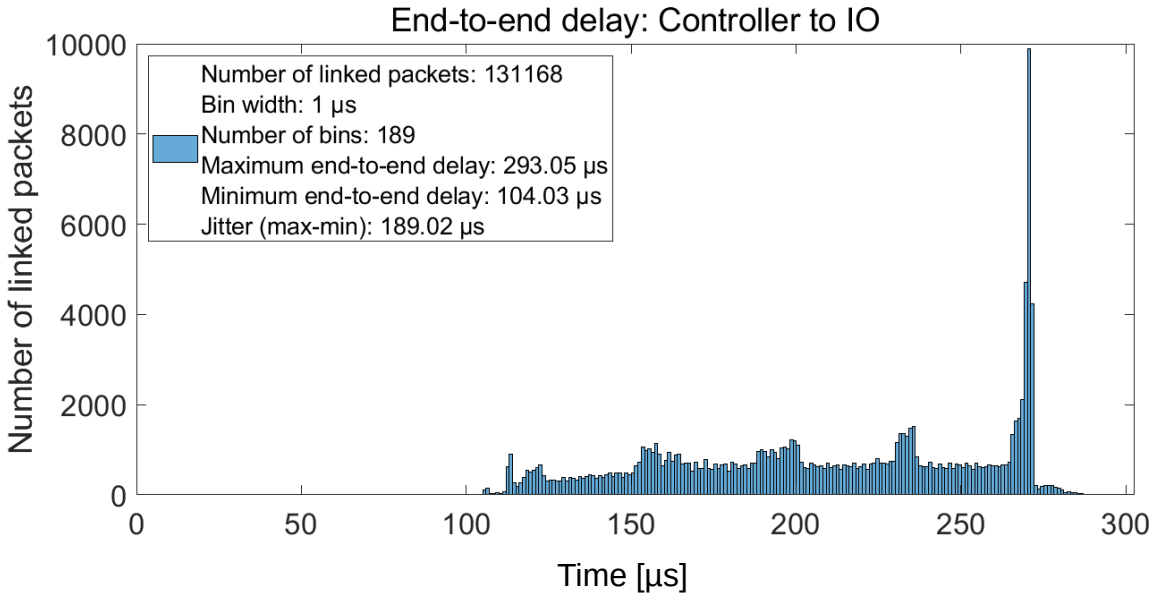

PN over TAS - Measurements

- 1000BASE-T
- TAS window size: 15,625 µs and 125 µs

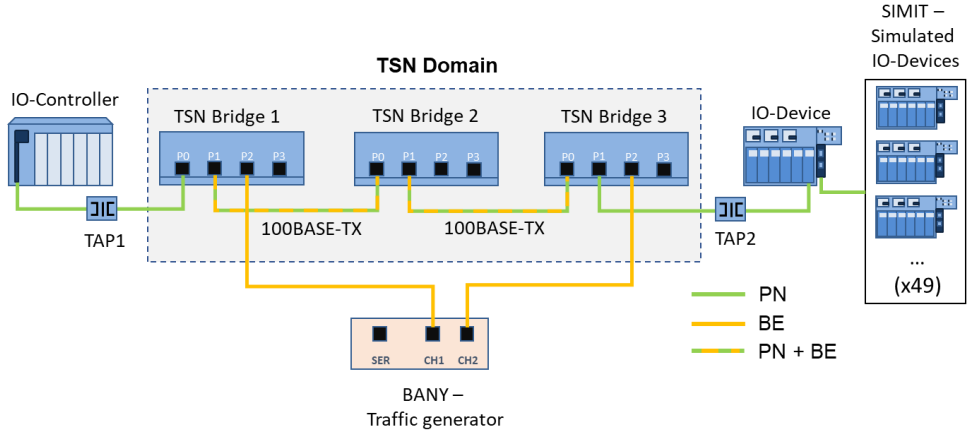

End-to-end delay – TAS window size 15,625 µs

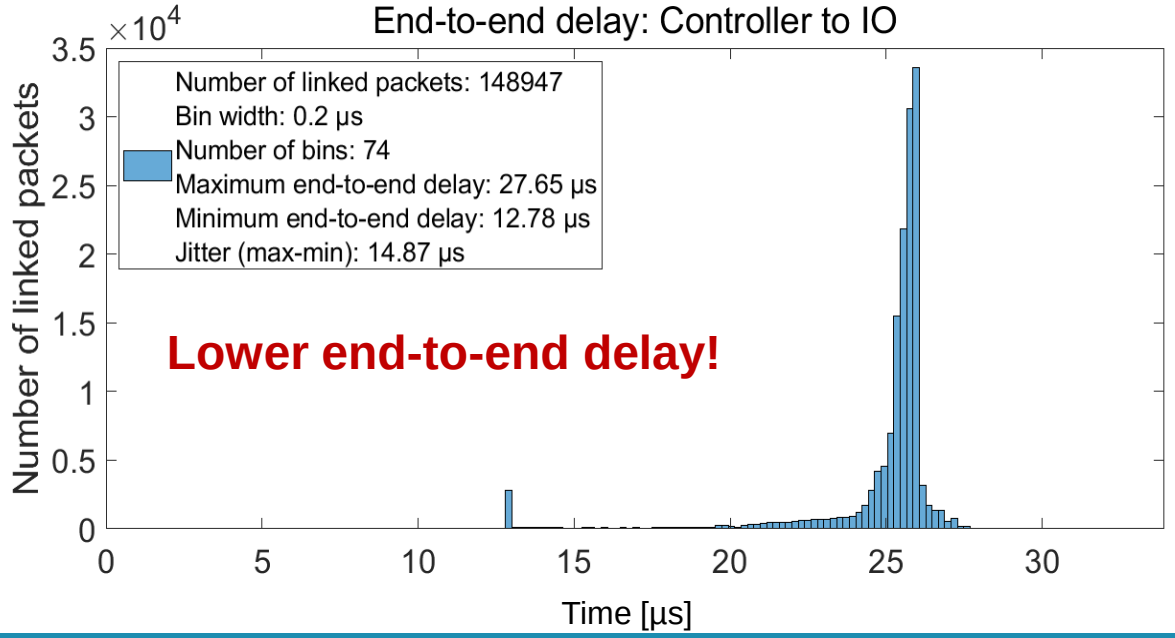

End-to-end delay – TAS window size 125 µs

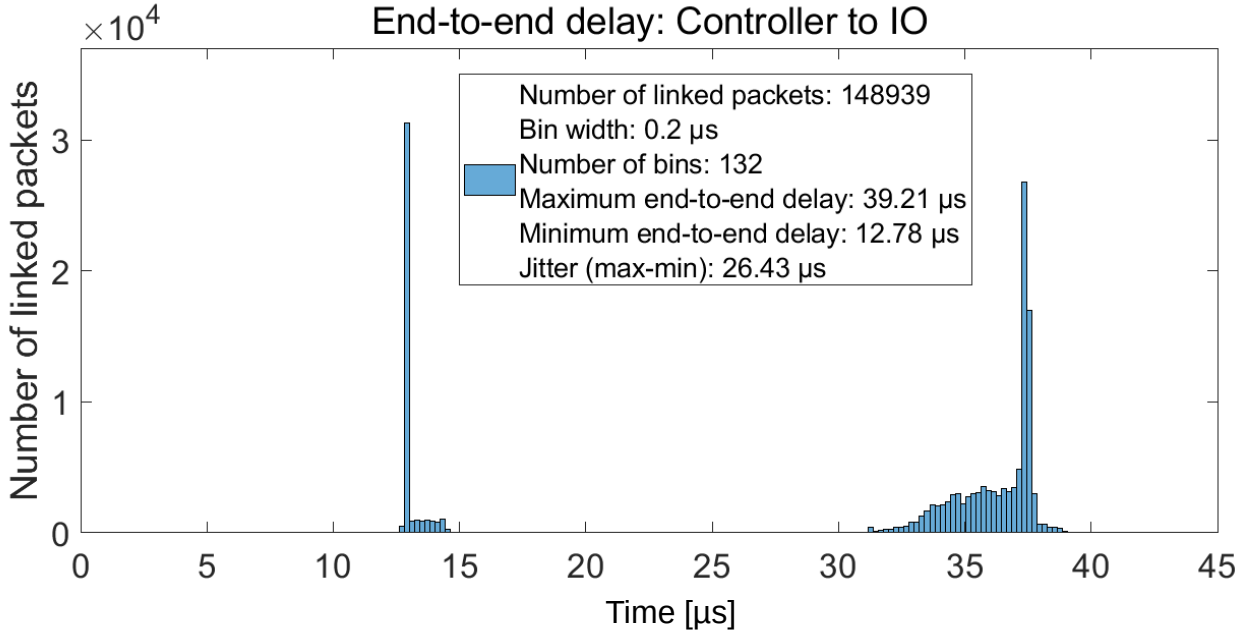

PN over TAS - Measurements

- 1000BASE-T
- TAS window size: 15,625 µs and 125 µs
- Max. end-to-end delay reduced with small TAS window!

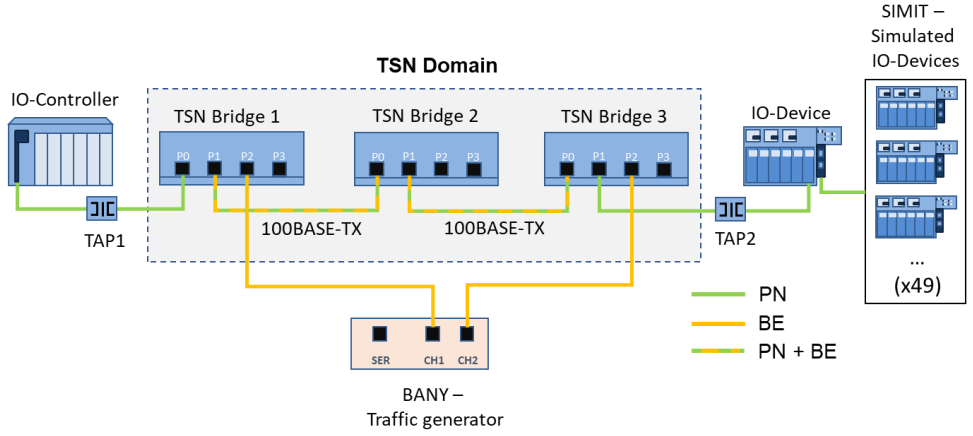

End-to-end delay – TAS window size 15,625 µs

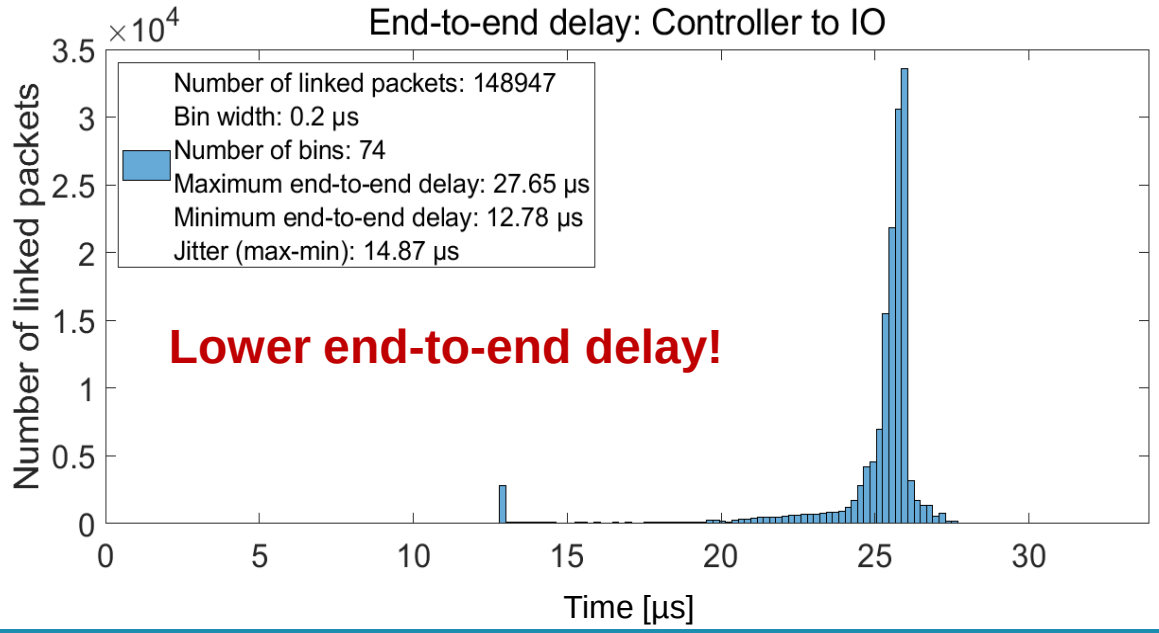

End-to-end delay – PN RT - with BE traffic

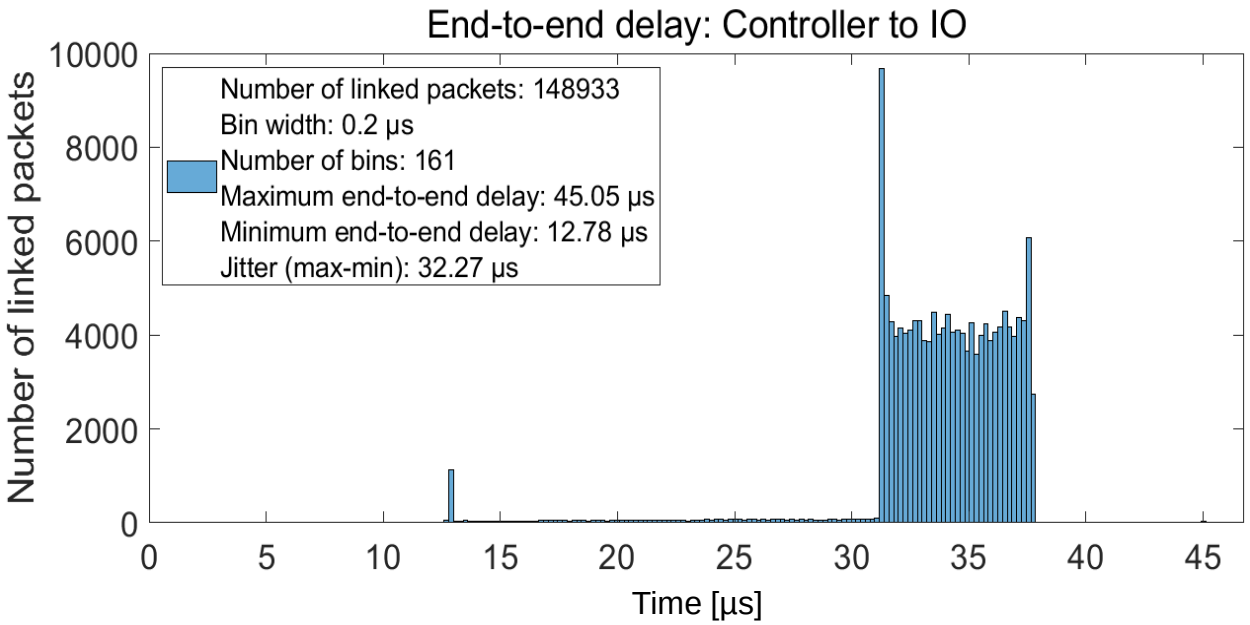

PN over TAS – Conclusion

- TAS does **not guarantee** a lower end-to-end delay
- TAS provides PN **bandwidth reservation**
  - Protection from netload bursts!
- Bandwidth might not fully be utilized (guard bands)
- Small TAS windows are preferred
  - Improved network predictability
  - Small TAS windows **can** improve end-to-end delay
  - Determine max. end-to-end delay with
    - PN load
    - TAS Configuration
    - Topology

→ **Impractical**

Analysis of a brownfield PN over TSN network

- End-to-end delay comparison of different network configurations
  - Standard PN RT network – benchmark
  - **Brownfield PN over TSN**
    - Time Aware Shaper
    - **Preemption**
    - Time Aware Shaper + preemption

Preemption - measurements

- 100BASE-TX
- BE traffic: 35% Netload, 1538 byte frame length
- **End-to-end delay greatly reduced**

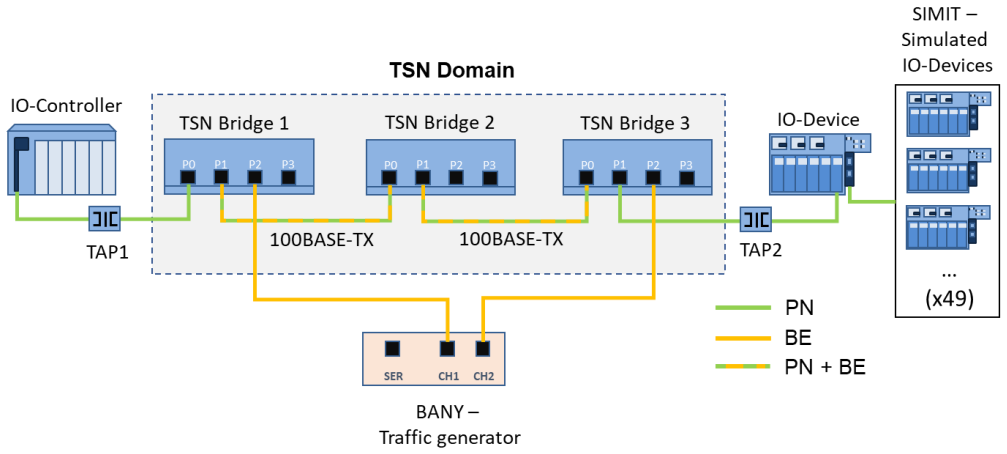

End-to-end delay - PN RT – with BE traffic

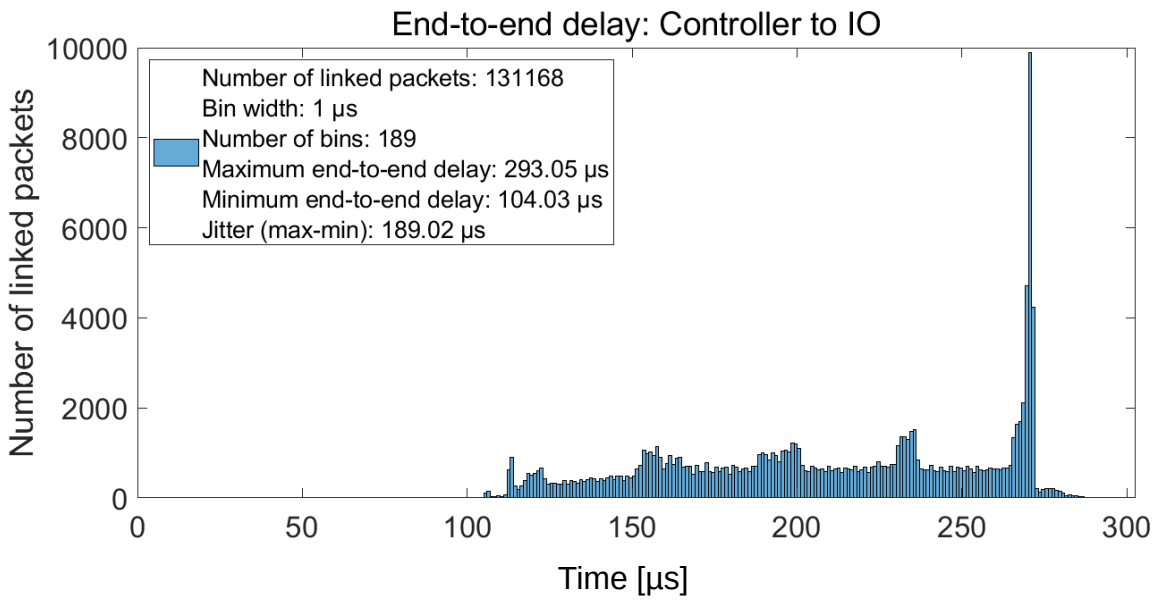

End-to-end delay – Preemption – with BE traffic

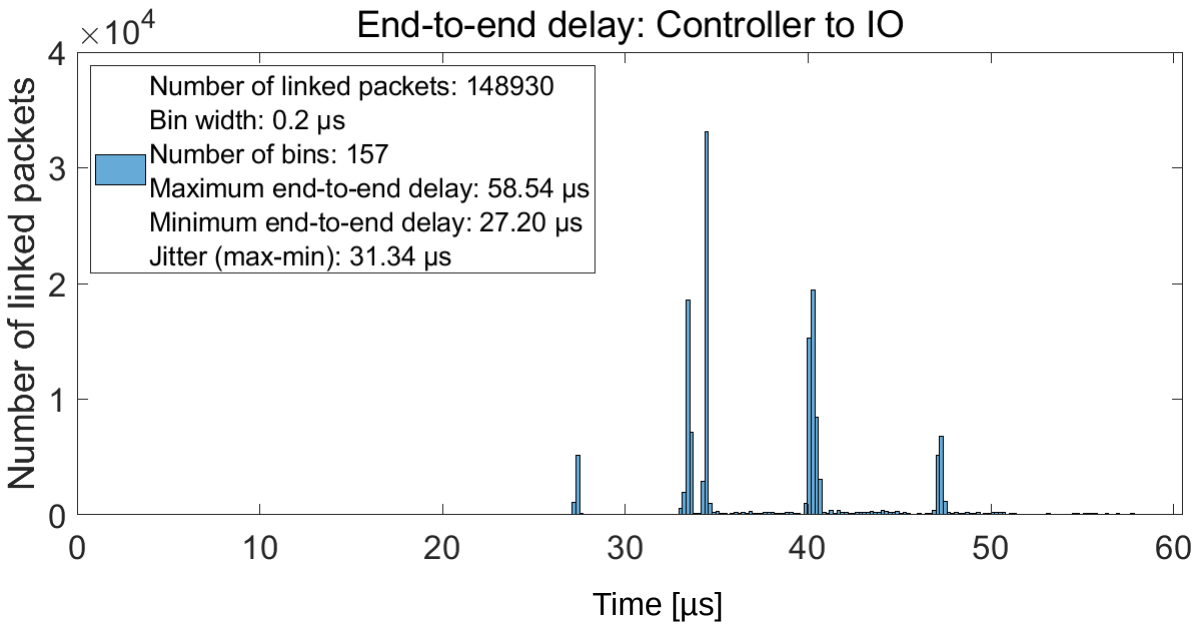

Preemption - measurements

- 1000BASE-T
- BE traffic: 35% Netload (350 Mbit/s), 1538 byte frame length
- **End-to-end delay greatly reduced**

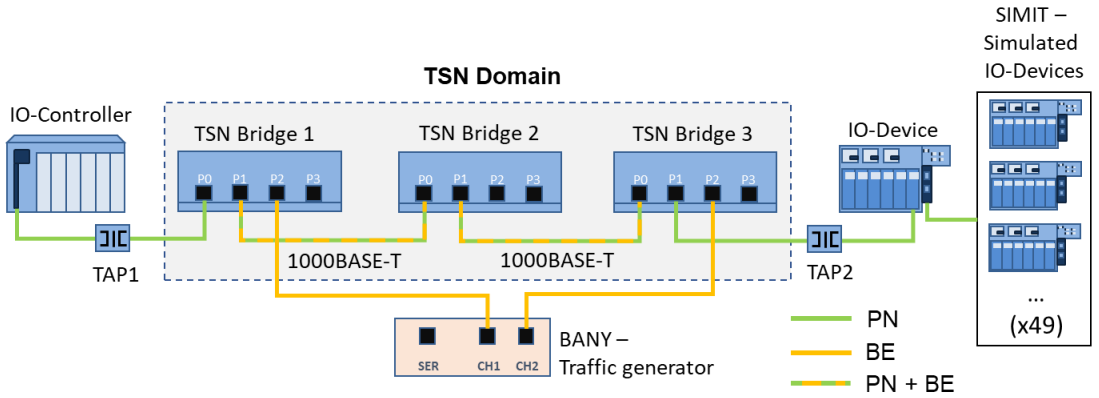

Issues exist 1000BASE-T preemption implementation, we are in contact with vendor to clarify this!

End-to-end delay – PN RT - with BE traffic

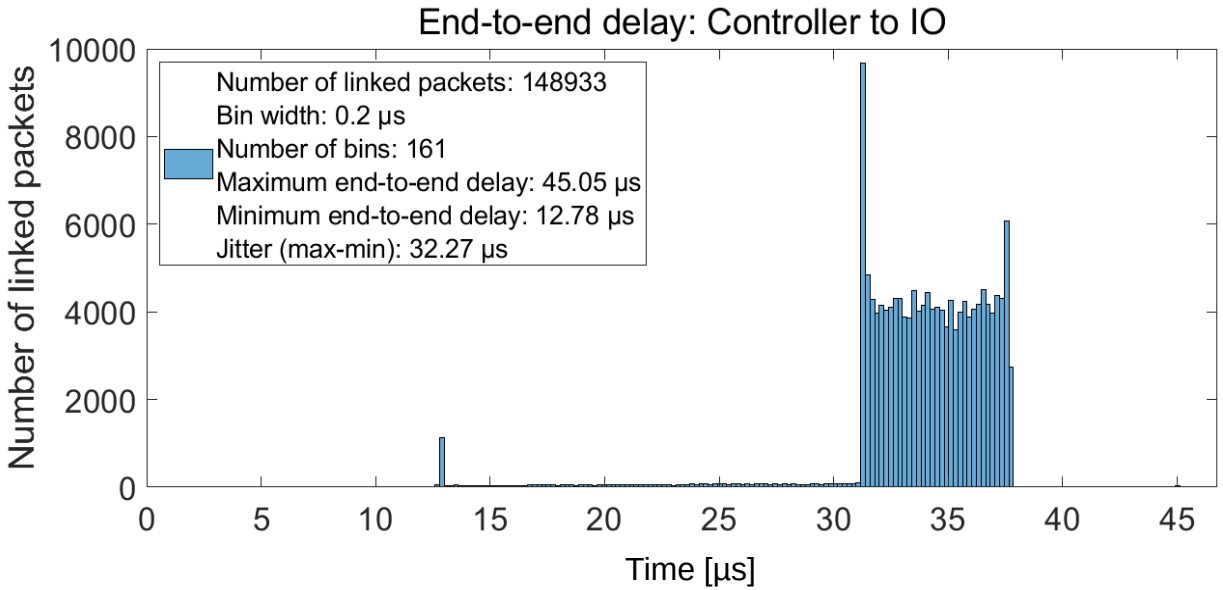

End-to-end delay – Preemption with BE traffic

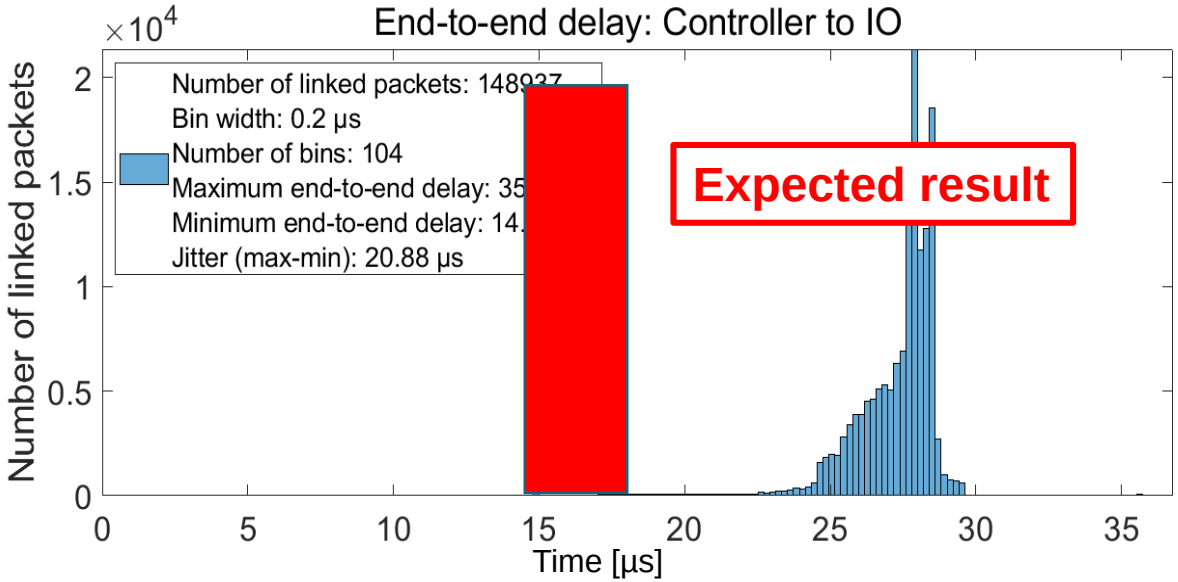

Preemption – conclusion

- Preemption greatly reduces end-to-end delay

Analysis of a brownfield PN over TSN network

- End-to-end delay comparison of different network configurations
  - Standard PN RT network – benchmark
  - **Brownfield PN over TSN**
    - Time Aware Shaper
    - Preemption
    - **Time Aware Shaper + preemption**

TAS + preemption

- 100BASE-TX
- BE traffic: 35% Netload, 1538 byte frame length
- **End-to-end delay identical to preemption stand alone**
- **TAS window size does not influence delay**

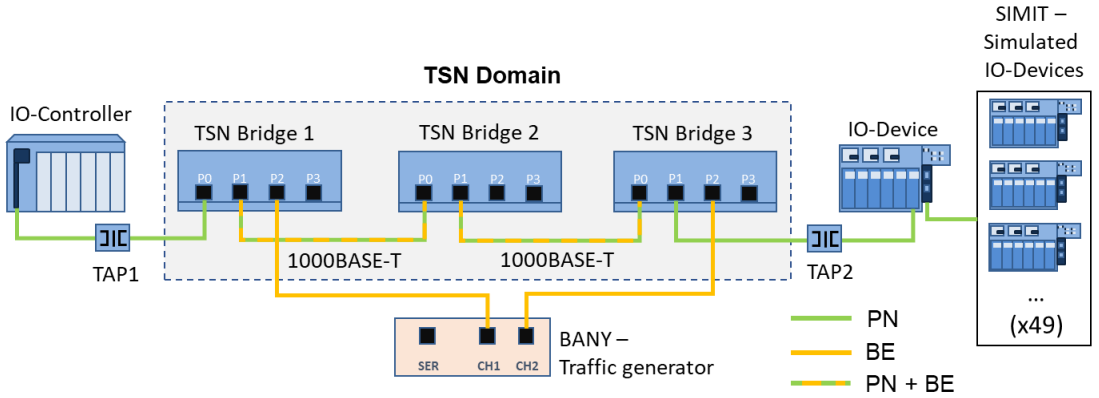

Preemption stand-alone - with BE traffic

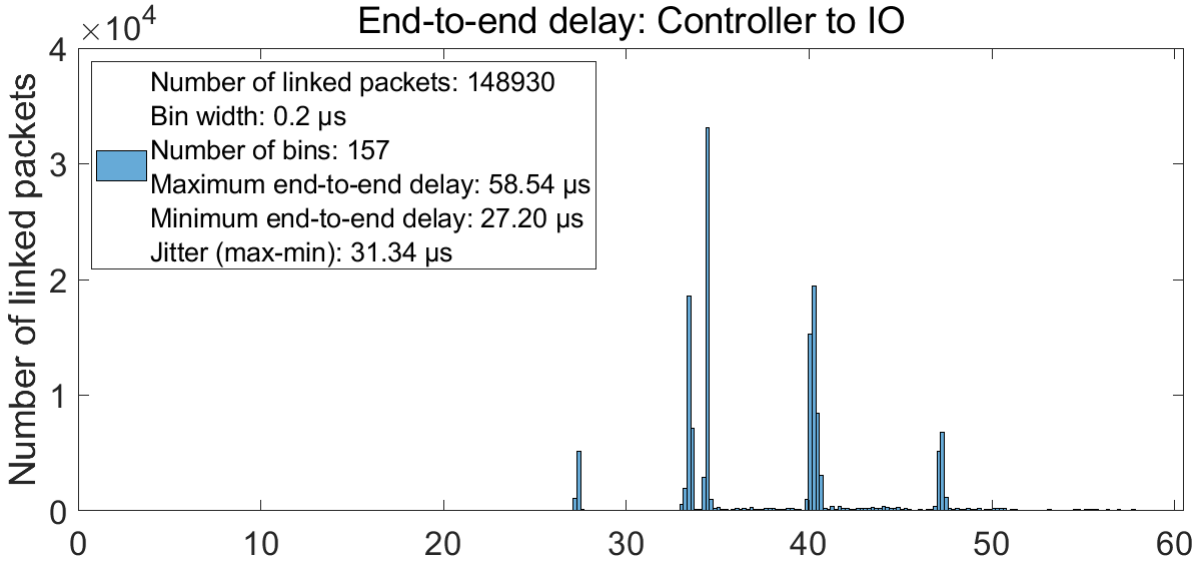

TAS 125 µs + Preemption – with BE

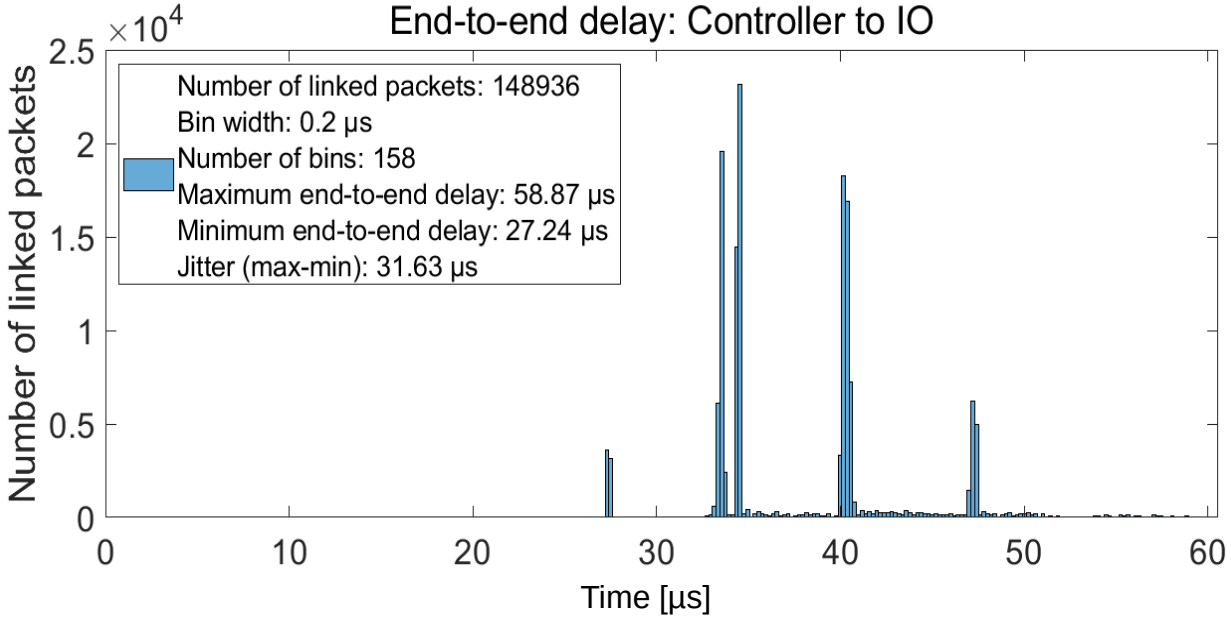

TAS + preemption

- 100BASE-TX
- BE traffic: 35% Netload, 1538 byte frame length
- **End-to-end delay identical to preemption stand alone**
- **TAS window size does not influence delay**

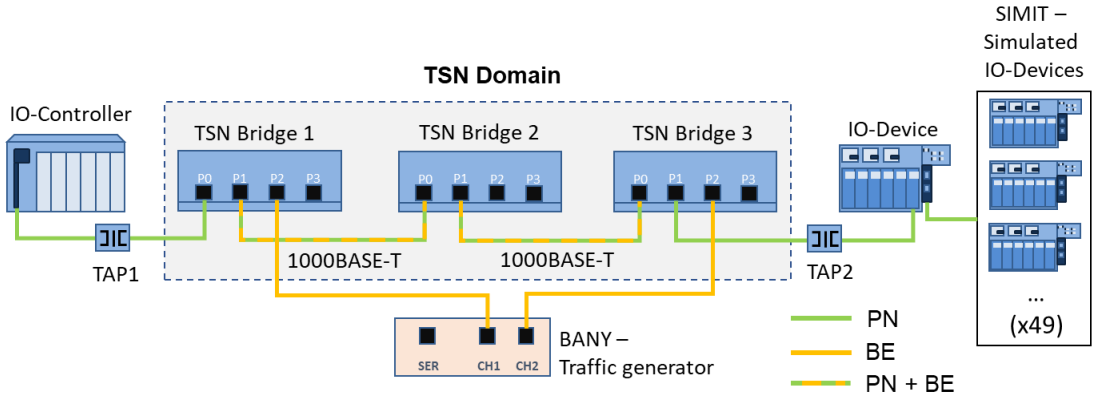

TAS 15,625 µs + Preemption – with BE

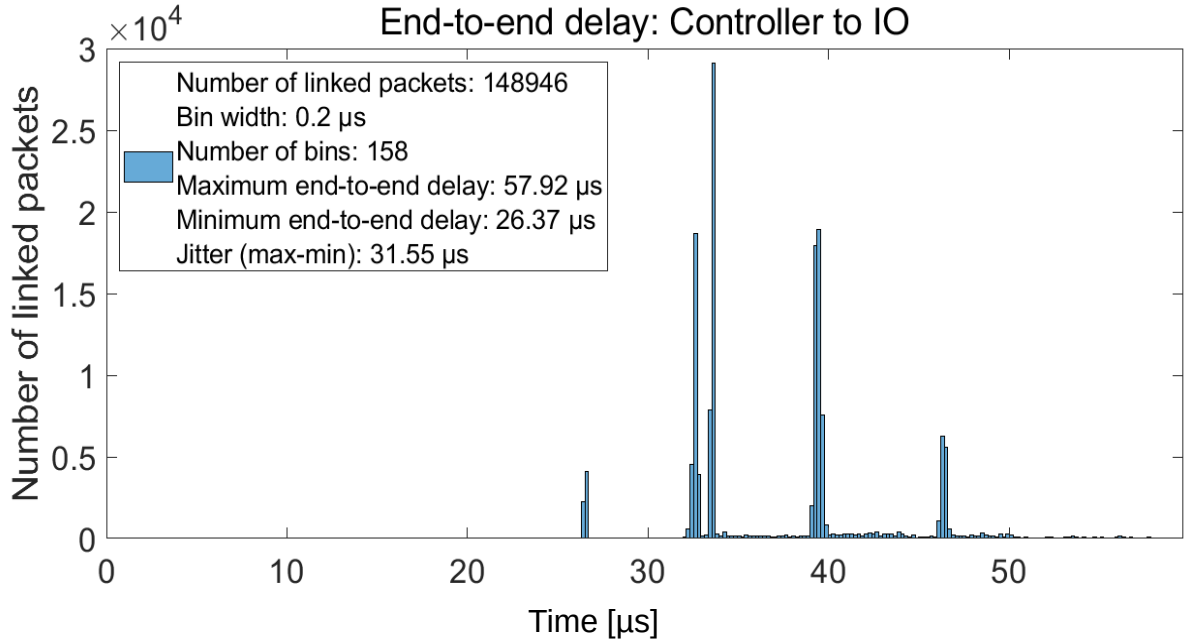

TAS 125 µs + Preemption – with BE

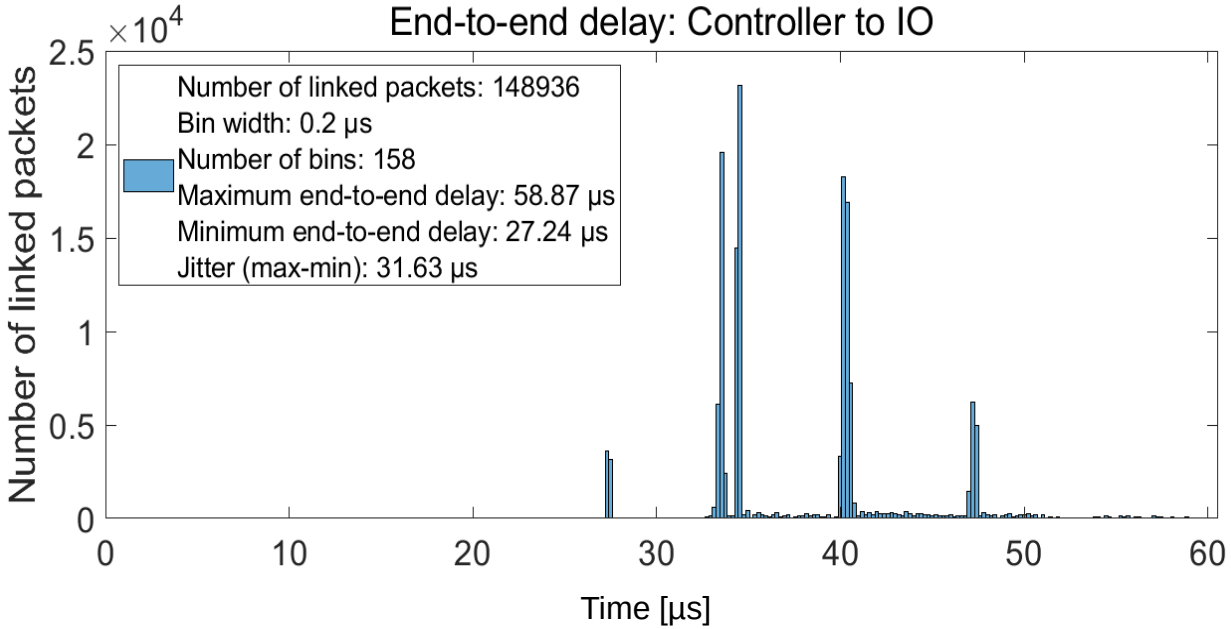

TAS + preemption

- 1000BASE-T
- BE traffic: 35% Netload (350 Mbit/s), 1538 byte frame length
- **End-to-end delay greatly reduced**
- **TAS window size does not influence delay**

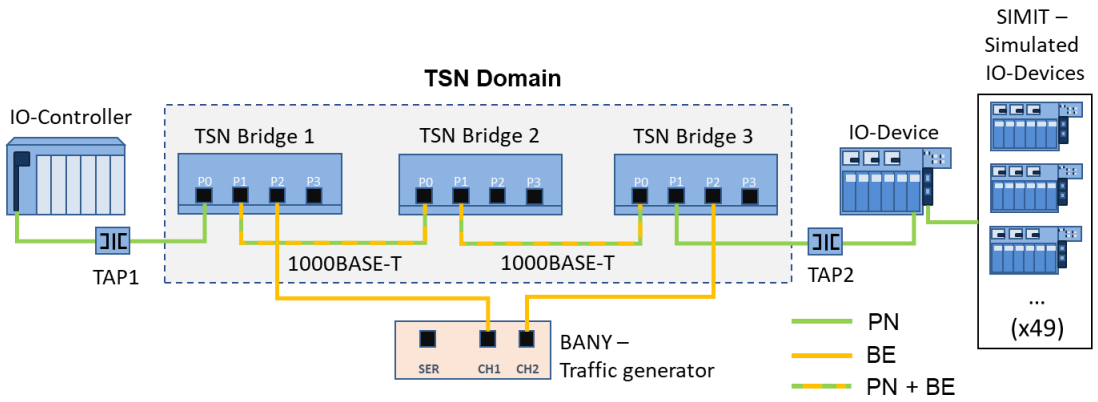

Issues exist 1000BASE-T preemption implementation, we are in contact with vendor to clarify this!

Preemption stand-alone - with BE

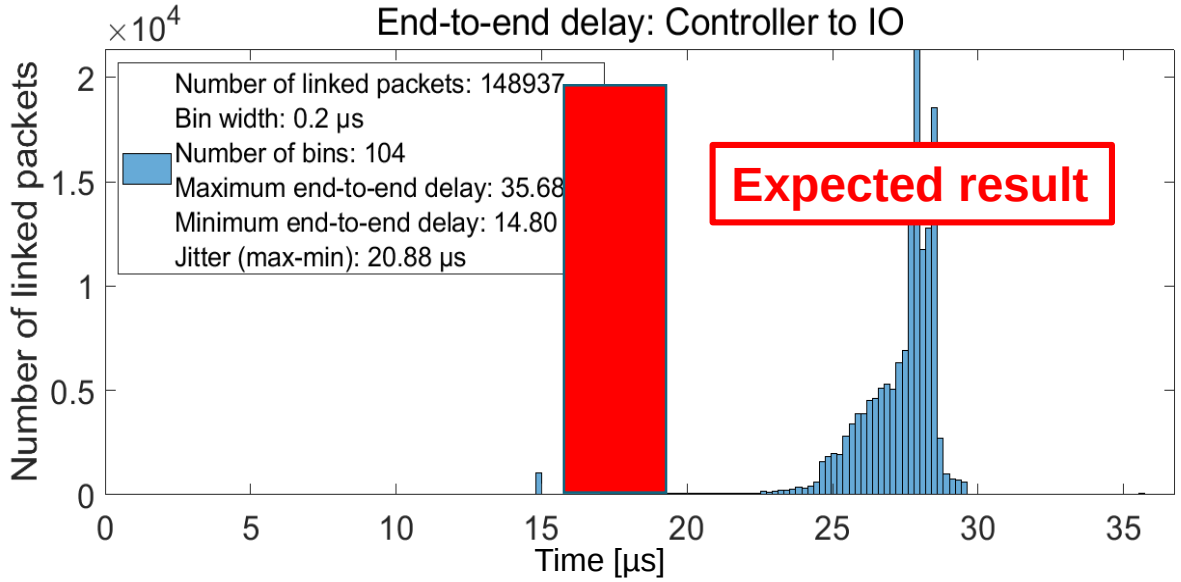

TAS 15,625 µs + Preemption – with BE

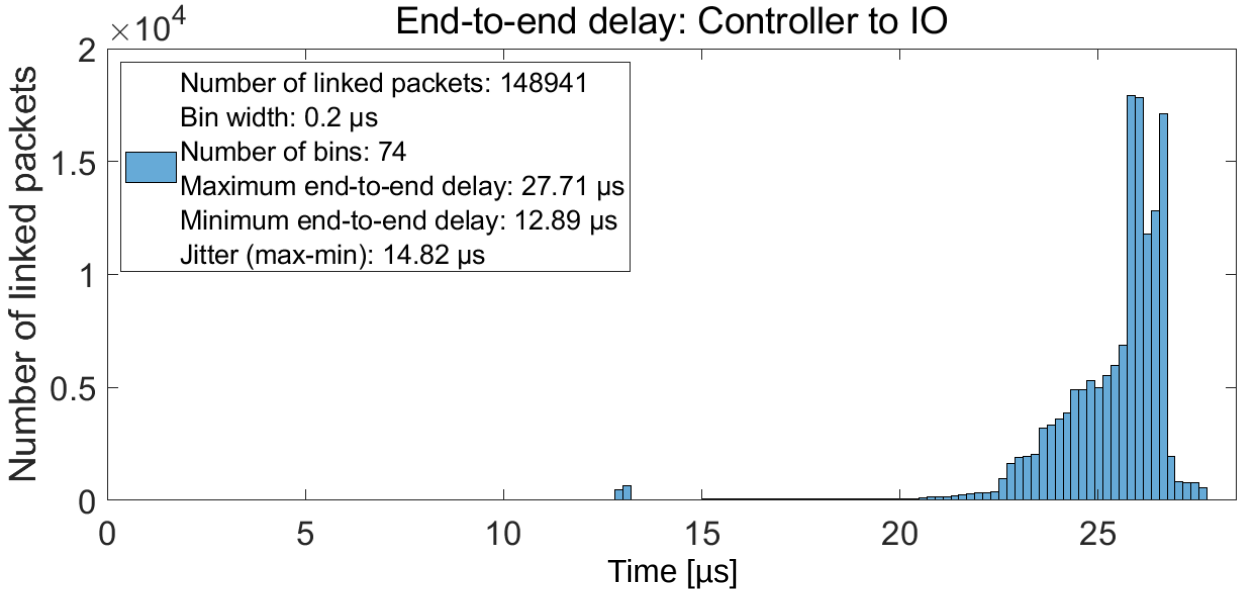

TAS + preemption

- 1000BASE-T
- BE traffic: 35% Netload (350 Mbit/s), 1538 byte frame length
- **End-to-end delay greatly reduced**
- **TAS window size does not influence delay**

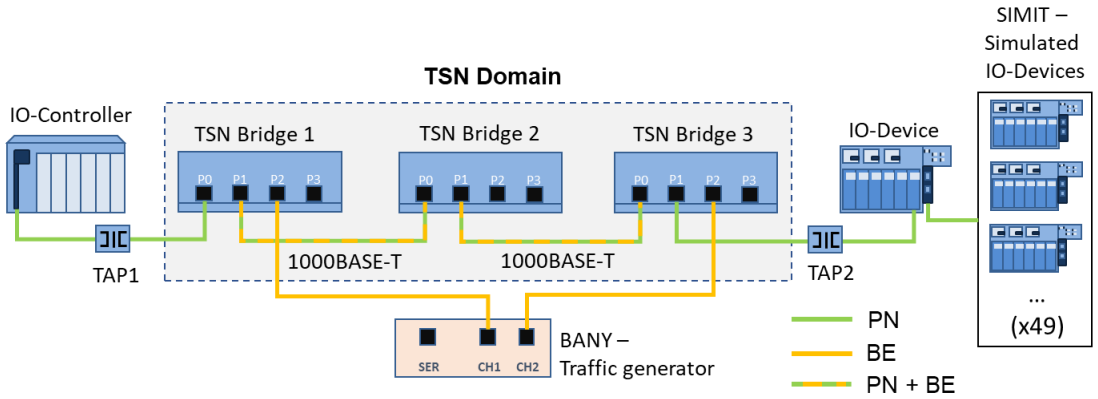

Issues exist 1000BASE-T preemption implementation, we are in contact with vendor to clarify this!

TAS 15,625 µs + Preemption – with BE

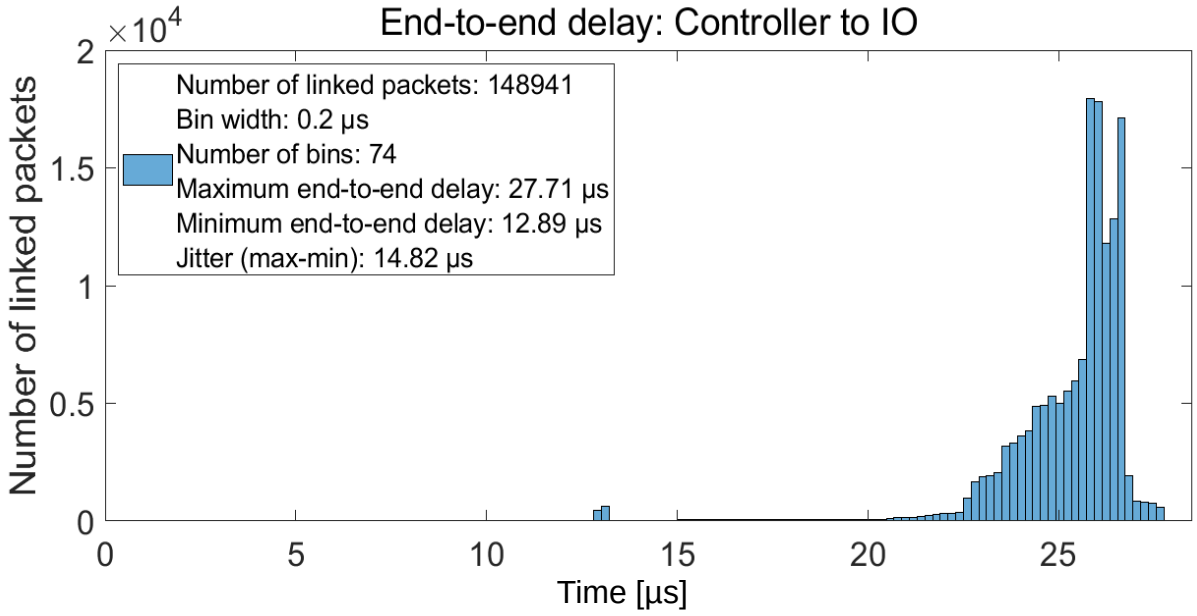

TAS 125 µs + Preemption – with BE

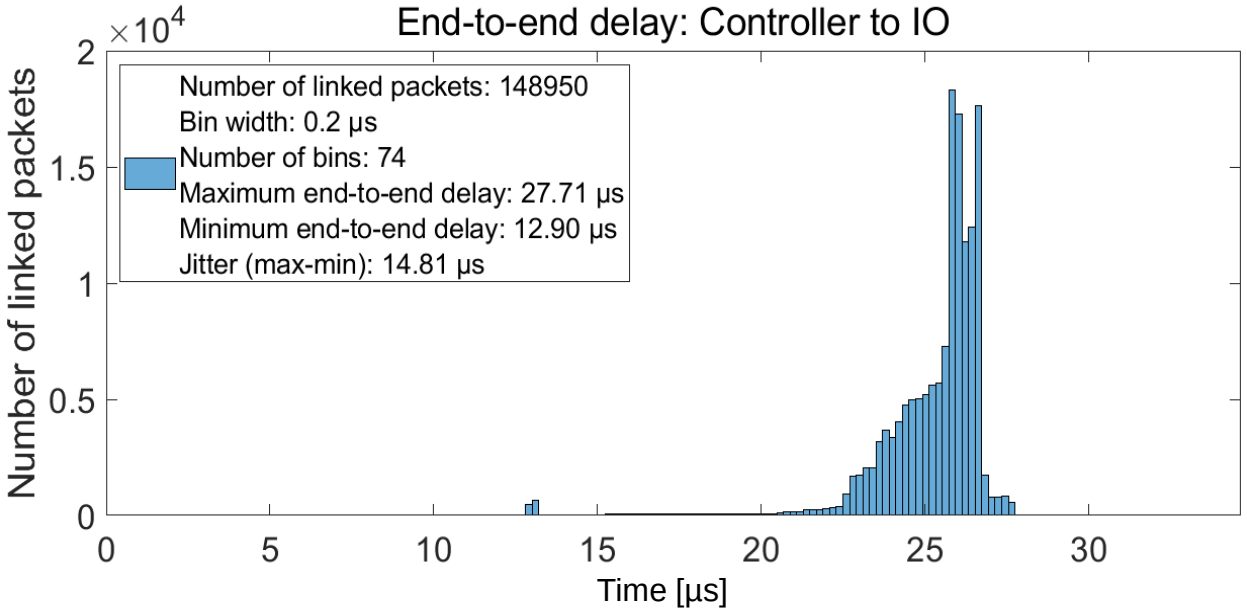

TAS + preemption - Conclusion

- TAS → bandwidth protection
- Preemption → low end-to-end delay
- TAS + preemption → increased bandwidth utilization

Conclusion

- Introduction
- Brownfield PROFINET RT over TSN – principles
- Test network: topology and configuration
- Performance evaluation
  - PROFINET RT
  - Brownfield PROFINET RT over TSN
- **Conclusion**

Brownfield PN over TSN - Conclusion

- Optimal configuration for **this demonstrator**
  - TAS + preemption = optimal configuration
    - Preemption provides low end-to-end delay
      - Deeper line depth allowed!
    - TAS protects PN traffic
    - Small guard band provide efficient BW use

- Upgrading to **1000BASE-T**
  - Provides high BW reserve for IT applications
  - Forwarding and transmission delay greatly reduced
    - Deeper line depth allowed!
    - Delay improvements almost identical to implementing preemption on 100BASE-TX